**Company name:**
**Created by:**
**Phone:**

**Date:** 9/10/2026

| Qty. | Description |
|---|---|
| 1 | **CRN 3-4 A-P-A-E-HQQE** |

**Note! Product picture may differ from actual product**

Product No.: 96516898

Vertical, non-self-priming, multistage, in-line, centrifugal pump for installation in pipe systems and mounting on a foundation.

The pump has the following characteristics:
- Impellers, intermediate chambers and outer sleeve are made of Stainless steel, EN 1.4401.
- Pump head cover and base are made of Stainless steel, EN 1.4408.
- The shaft seal has assembly length according to EN 12756.
- Power transmission is via cast iron split coupling.
- Pipework connection is via PJE flanges/couplings.

The motor is a 3-phase AC motor.

Controls:

| | |
|---|---|
| Terminal box position: | 6 |
| Frequency converter: | None |

Liquid:

| | |
|---|---|
| Pumped liquid: | Water |
| Liquid temperature range: | -20 .. 120 °C |
| Selected liquid temperature: | 20 °C |
| Density: | 998.2 kg/m³ |

Technical:

| | |
|---|---|
| Pump speed on which pump data are based: | 2873 rpm |
| Rated flow: | 3 m³/h |
| Rated head: | 19.1 m |
| Pump orientation: | Vertical |
| Shaft seal arrangement: | Single |
| Primary shaft seal: | HQQE |
| Code for shaft seal: | HQQE |
| Approvals: | CE,EAC,UKCA,SEPRO,RCM, |
| Approvals for drinking water: | WRAS,ACS |

**Company name:**
**Created by:**
**Phone:**

**Date:** 9/10/2026

| Qty. | Description | |
|---|---|---|
| 1 | Curve tolerance: | ISO9906:2012 3B |
| | Materials: | |
| | Type key, code for rubber components. E = EPDM, V=FKM: | E |
| | Base: | Stainless steel |
| | | EN 1.4408 |
| | | AISI 316 |
| | Impeller: | Stainless steel |
| | | EN 1.4401 |
| | | AISI 316 |
| | Type key, code for materials: | A |
| | Bearing: | SIC |
| | Installation: | |
| | Maximum ambient temperature: | 60 °C |
| | Maximum operating pressure: | 25 bar |
| | Max pressure at stated temp: | 25 bar / 120 °C |
| | | 25 bar / -20 °C |
| | Type of connection: | PJE |
| | Size of inlet connection: | DN 32 |
| | | 1 1/4 inch |
| | Size of outlet connection: | DN 32 |
| | | 1 1/4 inch |
| | Pressure rating for connection: | PN 50 |
| | Flange size for motor: | FT85 |
| | Terminal box position: | 6 |
| | Electrical data: | |
| | Motor standard: | IEC |
| | Motor type: | 71A |
| | Rated power - P2: | 0.37 kW |
| | Power (P2) required by pump: | 0.37 kW |
| | Mains frequency: | 50 Hz |
| | Rated voltage: | 3 x 220-240D/380-415Y V |
| | Rated current: | 1.74/1.00 A |
| | Starting current: | 490-530 % |
| | Cos phi - power factor: | 0.80-0.70 |
| | Rated speed: | 2850-2880 rpm |
| | IE Efficiency class: | IE3 |
| | Motor efficiency at full load: | 73.8 % |
| | Motor efficiency at 3/4 load: | 79.0-76.5 % |
| | Motor efficiency at 1/2 load: | 75.5-71.5 % |
| | Number of poles: | 2 |
| | Enclosure class (IEC 34-5): | IP55 Dust/Jetting |
| | Insulation class (IEC 85): | F |
| | Built-in motor protection: | NONE |
| | Motor No: | 85805102 |

**Company name:**
**Created by:**
**Phone:**

**Date:** 9/10/2026

| Qty. | Description |
|---|---|
| 1 | Others:<br>Minimum efficiency index, MEI ≥: 0.70<br>Net weight: 17 kg<br>Gross weight: 19.7 kg<br>Shipping volume: 0.054 m³<br>Danish VVS No.: 385911004 |

**Company name:**
**Created by:**
**Phone:**

**Date:** 9/10/2026

# 96516898 CRN 3-4 A-P-A-E-HQQE 50 Hz

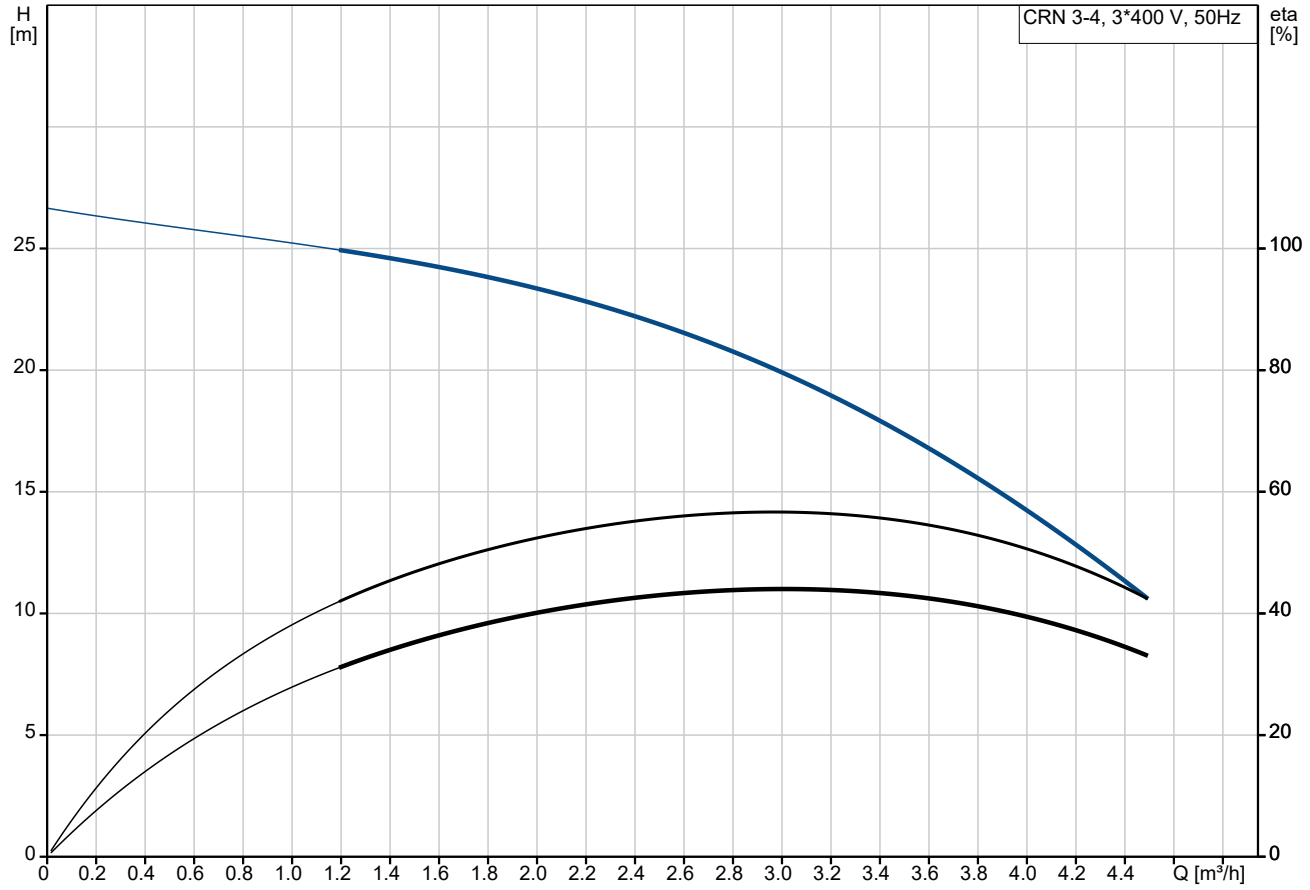


Pumped liquid = Water
Liquid temperature during operation = 20 °C
Density = 998.2 kg/m³

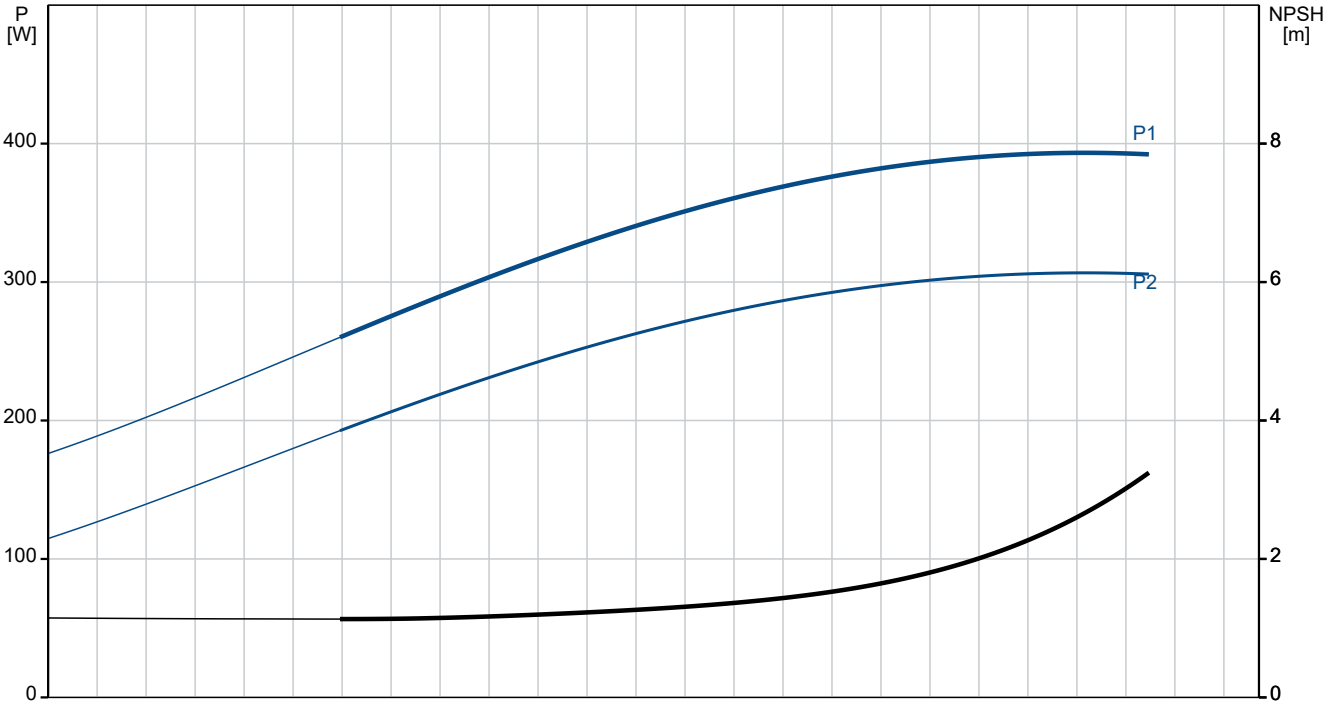

**Company name:**

**Created by:**

**Phone:**

**Date:** 9/10/2026

| Description | Value |
|---|---|
| **General information:** | |
| Product name: | CRN 3-4 A-P-A-E-HQQE |
| Product No: | 96516898 |
| EAN number: | 5700396752075 |
| Price: | |
| **Technical:** | |
| Pump speed on which pump data are based: | 2873 rpm |
| Rated flow: | 3 m³/h |
| Rated head: | 19.1 m |
| Maximum head: | 26.5 m |
| Stages: | 4 |
| Impellers: | 4 |
| Number of reduced-diameter impellers: | 0 |
| Low NPSH: | N |
| Pump orientation: | Vertical |
| Shaft seal arrangement: | Single |
| Primary shaft seal: | HQQE |
| Code for shaft seal: | HQQE |
| Approvals: | CE,EAC,UKCA,SEPRO,RCM, |
| Approvals for drinking water: | WRAS,ACS |
| Curve tolerance: | ISO9906:2012 3B |
| Pump version: | A |
| Model: | A |
| Pump type: | CRN |
| **Materials:** | |
| Type key, code for rubber components. E = EPDM, V=FKM: | E |
| Base: | Stainless steel |
| | EN 1.4408 |
| | AISI 316 |
| Impeller: | Stainless steel |
| | EN 1.4401 |
| | AISI 316 |
| Type key, code for materials: | A |
| Code for rubber: | E |
| Bearing: | SIC |
| **Installation:** | |
| Maximum ambient temperature: | 60 °C |
| Maximum operating pressure: | 25 bar |
| Max pressure at stated temp: | 25 bar / 120 °C |
| | 25 bar / -20 °C |
| Type key, code for pipework connection: | P |
| Type of connection: | PJE |
| Size of inlet connection: | DN 32 |
| | 1 1/4 inch |
| Size of outlet connection: | DN 32 |
| | 1 1/4 inch |
| Pressure rating for connection: | PN 50 |
| Flange size for motor: | FT85 |
| Terminal box position: | 6 |
| Connect code: | P |
| **Liquid:** | |
| Pumped liquid: | Water |
| Liquid temperature range: | -20 .. 120 °C |
| Selected liquid temperature: | 20 °C |

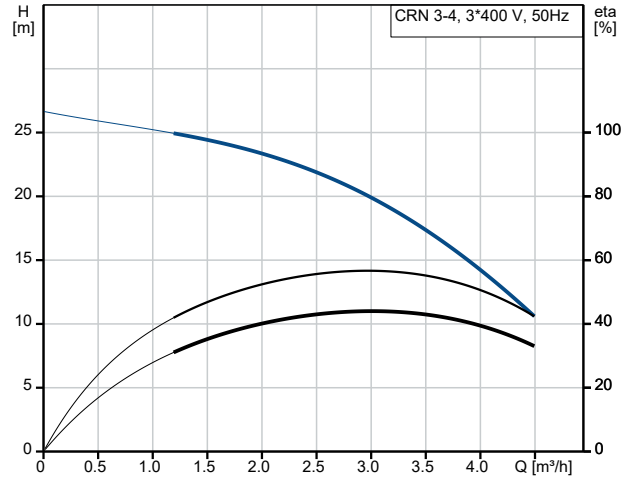


Pumped liquid = Water
Liquid temperature during operation = 20 °C
Density = 998.2 kg/m³

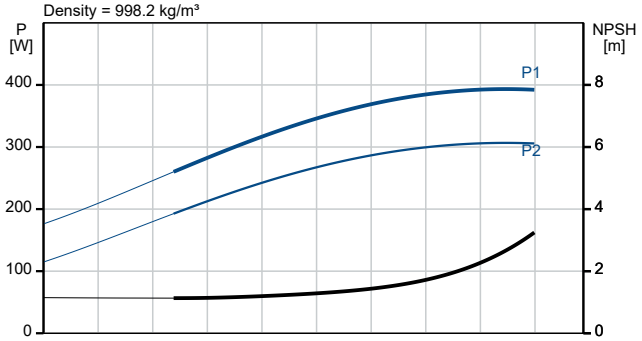


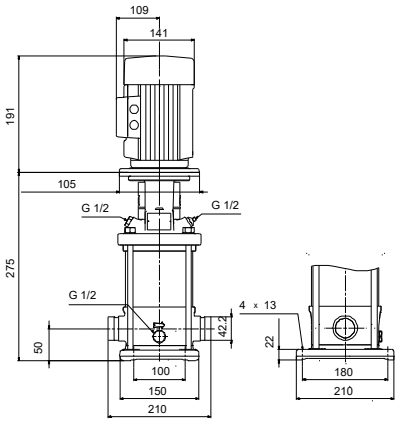


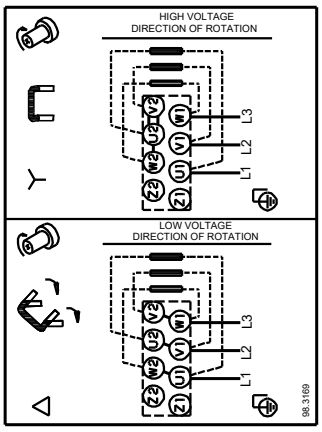

**Company name:**
**Created by:**
**Phone:**

**Date:** 9/10/2026

| Description | Value |
|---|---|
| Density: | 998.2 kg/m³ |
| **Electrical data:** | |
| Motor standard: | IEC |
| Motor type: | 71A |
| Rated power - P2: | 0.37 kW |
| Power (P2) required by pump: | 0.37 kW |
| Mains frequency: | 50 Hz |
| Rated voltage: | 3 x 220-240D/380-415Y V |
| Rated current: | 1.74/1.00 A |
| Starting current: | 490-530 % |
| Cos phi - power factor: | 0.80-0.70 |
| Rated speed: | 2850-2880 rpm |
| IE Efficiency class: | IE3 |
| Motor efficiency at full load: | 73.8 % |
| Motor efficiency at 3/4 load: | 79.0-76.5 % |
| Motor efficiency at 1/2 load: | 75.5-71.5 % |
| Number of poles: | 2 |
| Enclosure class (IEC 34-5): | IP55 Dust/Jetting |
| Insulation class (IEC 85): | F |
| Built-in motor protection: | NONE |
| Motor No: | 85805102 |
| **Controls:** | |
| Terminal box position: | 6 |
| Frequency converter: | None |
| **Others:** | |
| Minimum efficiency index, MEI ≥: | 0.70 |
| Net weight: | 17 kg |
| Gross weight: | 19.7 kg |
| Shipping volume: | 0.054 m³ |
| Danish VVS No.: | 385911004 |

**Company name:**
**Created by:**
**Phone:**

**Date:** 9/10/2026

# 96516898 CRN 3-4 A-P-A-E-HQQE 50 Hz

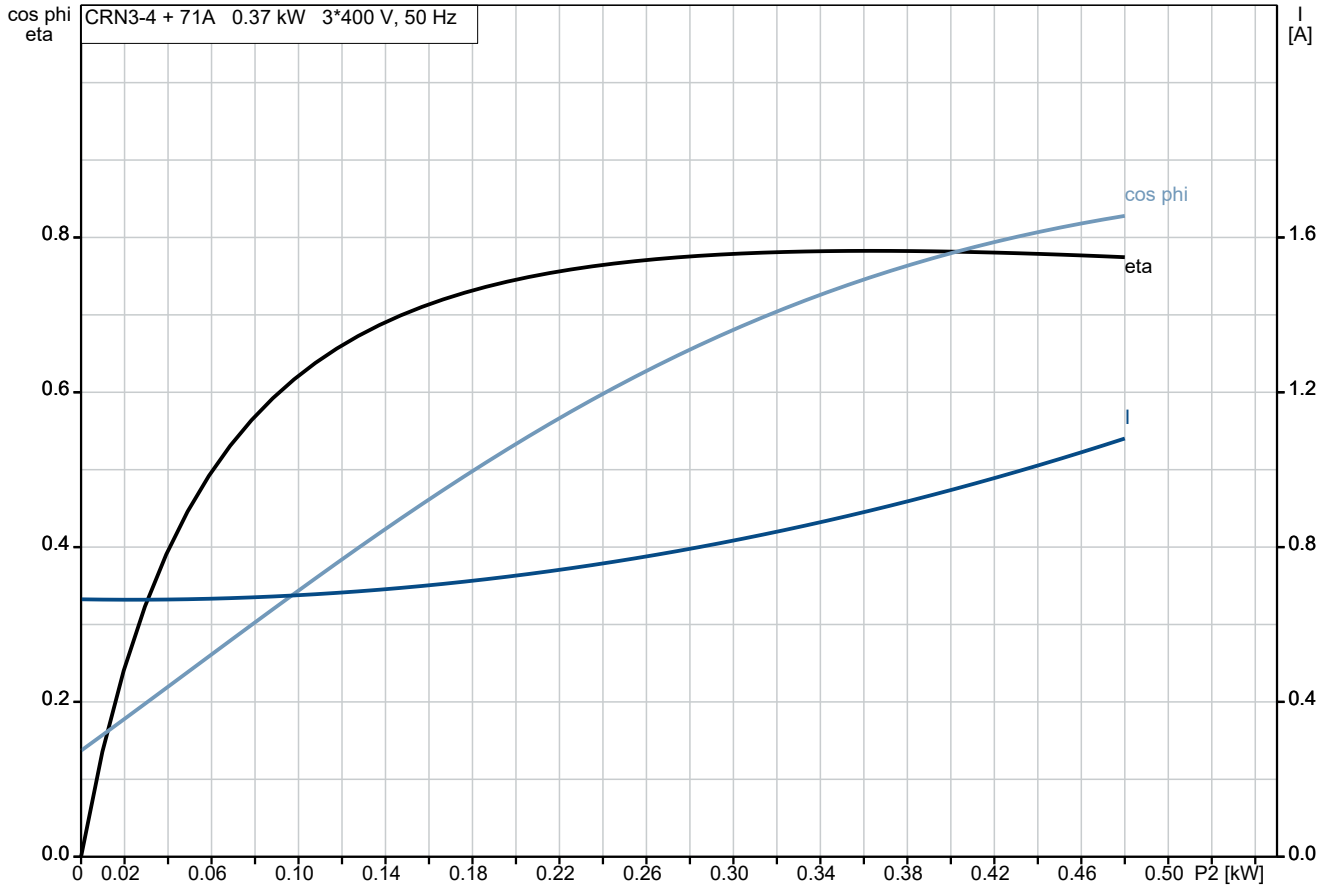


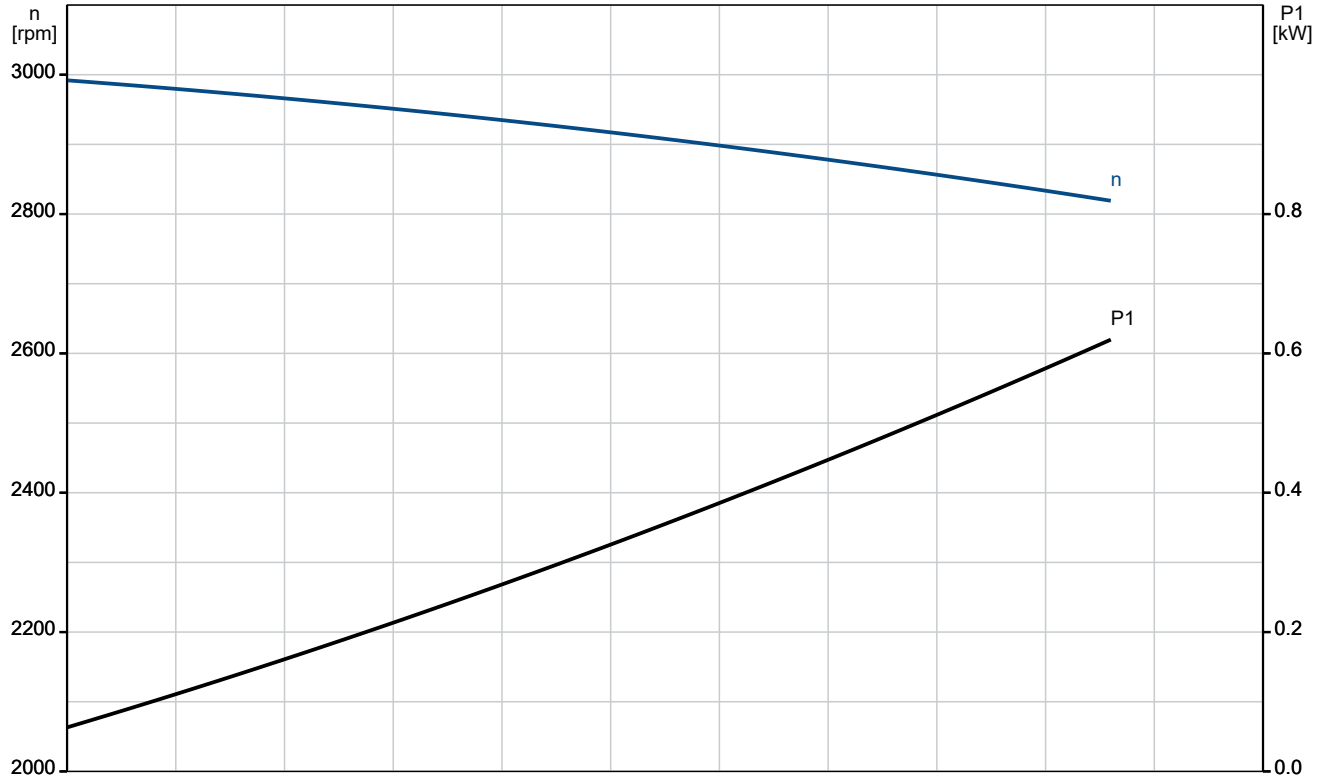

**Company name:**
**Created by:**
**Phone:**

**Date:** 9/10/2026

# 96516898 CRN 3-4 A-P-A-E-HQQE 50 Hz

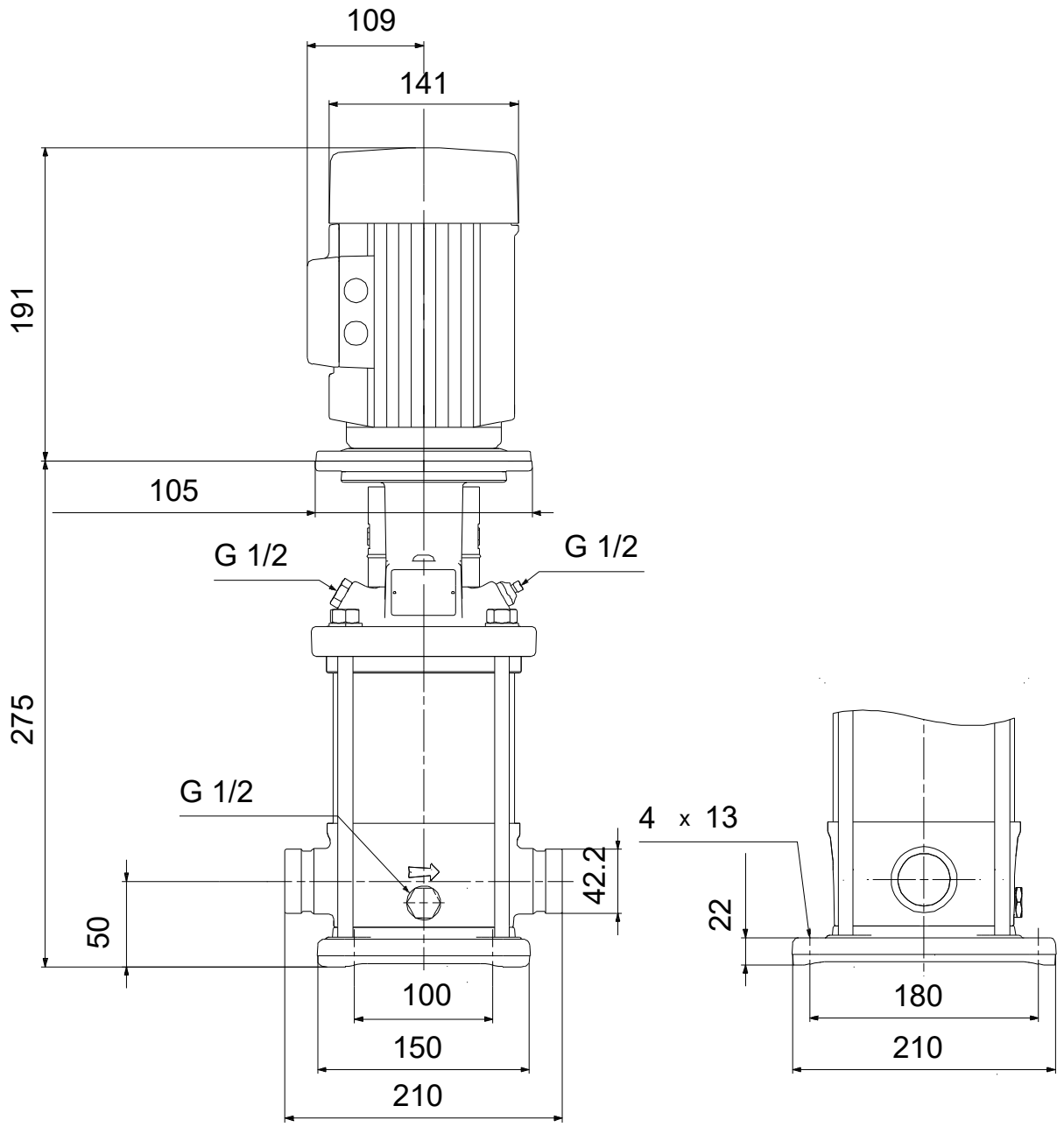


Note! All units are in [mm] unless others are stated.
Disclaimer: This simplified dimensional drawing does not show all details.

**Company name:**
**Created by:**
**Phone:**

**Date:** 9/10/2026

# 96516898 CRN 3-4 A-P-A-E-HQQE 50 Hz

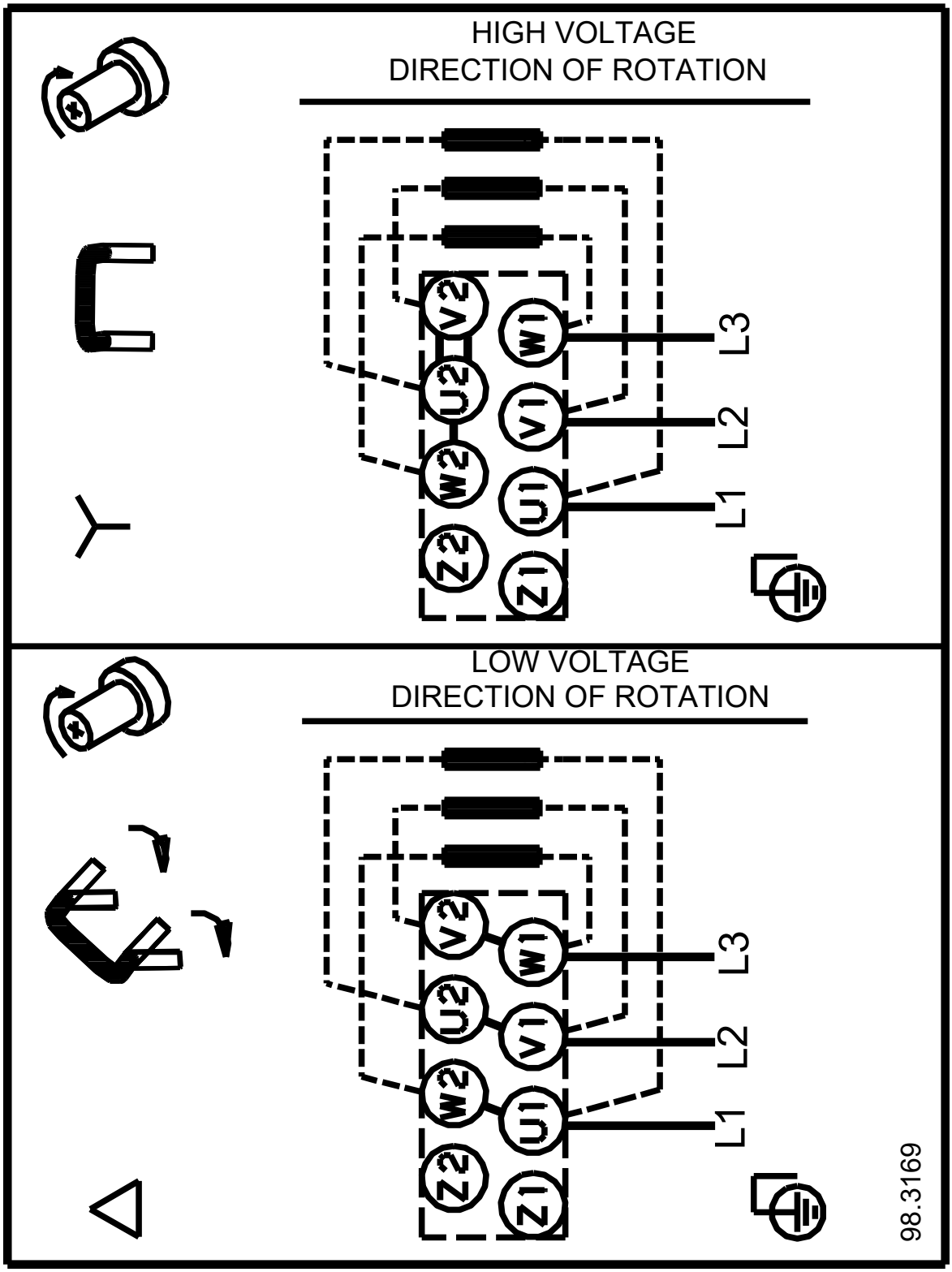


Note! All units are in [mm] unless others are stated.