Company name:
Created by:
Phone:

Date: 9/10/2026

Qty.	Description
1	**CRN 1-6 A-P-A-E-HQQE**

Note! Product picture may differ from actual product

Product No.: 96516483

Vertical, non-self-priming, multistage, in-line, centrifugal pump for installation in pipe systems and mounting on a foundation.

The pump has the following characteristics:
- Impellers, intermediate chambers and outer sleeve are made of Stainless steel, EN 1.4401.
- Pump head cover and base are made of Stainless steel, EN 1.4408.
- The shaft seal has assembly length according to EN 12756.
- Power transmission is via cast iron split coupling.
- Pipework connection is via PJE flanges/couplings.

The motor is a 3-phase AC motor.

Controls:

Terminal box position:	6
Frequency converter:	None

Liquid:

Pumped liquid:	Water
Liquid temperature range:	-20 .. 120 °C
Selected liquid temperature:	20 °C
Density:	998.2 kg/m³

Technical:

Pump speed on which pump data are based:	2873 rpm
Rated flow:	1.8 m³/h
Rated head:	28.3 m
Pump orientation:	Vertical
Shaft seal arrangement:	Single
Primary shaft seal:	HQQE
Code for shaft seal:	HQQE
Approvals:	CE,EAC,UKCA,SEPRO,RCM,
Approvals for drinking water:	WRAS,ACS

Company name:
Created by:
Phone:

Date: 9/10/2026

Qty.	Description	
1	Curve tolerance:	ISO9906:2012 3B
	Materials:	
	Type key, code for rubber components. E = EPDM, V=FKM:	E
	Base:	Stainless steel
		EN 1.4408
		AISI 316
	Impeller:	Stainless steel
		EN 1.4401
		AISI 316
	Type key, code for materials:	A
	Bearing:	SIC
	Installation:	
	Maximum ambient temperature:	60 °C
	Maximum operating pressure:	25 bar
	Max pressure at stated temp:	25 bar / 120 °C
		25 bar / -20 °C
	Type of connection:	PJE
	Size of inlet connection:	DN 32
		1 1/4 inch
	Size of outlet connection:	DN 32
		1 1/4 inch
	Pressure rating for connection:	PN 50
	Flange size for motor:	FT85
	Terminal box position:	6
	Electrical data:	
	Motor standard:	IEC
	Motor type:	71A
	Rated power - P2:	0.37 kW
	Power (P2) required by pump:	0.37 kW
	Mains frequency:	50 Hz
	Rated voltage:	3 x 220-240D/380-415Y V
	Rated current:	1.74/1.00 A
	Starting current:	490-530 %
	Cos phi - power factor:	0.80-0.70
	Rated speed:	2850-2880 rpm
	IE Efficiency class:	IE3
	Motor efficiency at full load:	73.8 %
	Motor efficiency at 3/4 load:	79.0-76.5 %
	Motor efficiency at 1/2 load:	75.5-71.5 %
	Number of poles:	2
	Enclosure class (IEC 34-5):	IP55 Dust/Jetting
	Insulation class (IEC 85):	F
	Built-in motor protection:	NONE
	Motor No:	85805102

Company name:
Created by:
Phone:

Date: 9/10/2026

Qty.	Description
1	Others: Minimum efficiency index, MEI ≥: 0.70 Net weight: 17.8 kg Gross weight: 20.4 kg Shipping volume: 0.054 m³ Danish VVS No.: 385910006

Company name:
Created by:
Phone:

Date: 9/10/2026

96516483 CRN 1-6 A-P-A-E-HQQE 50 Hz

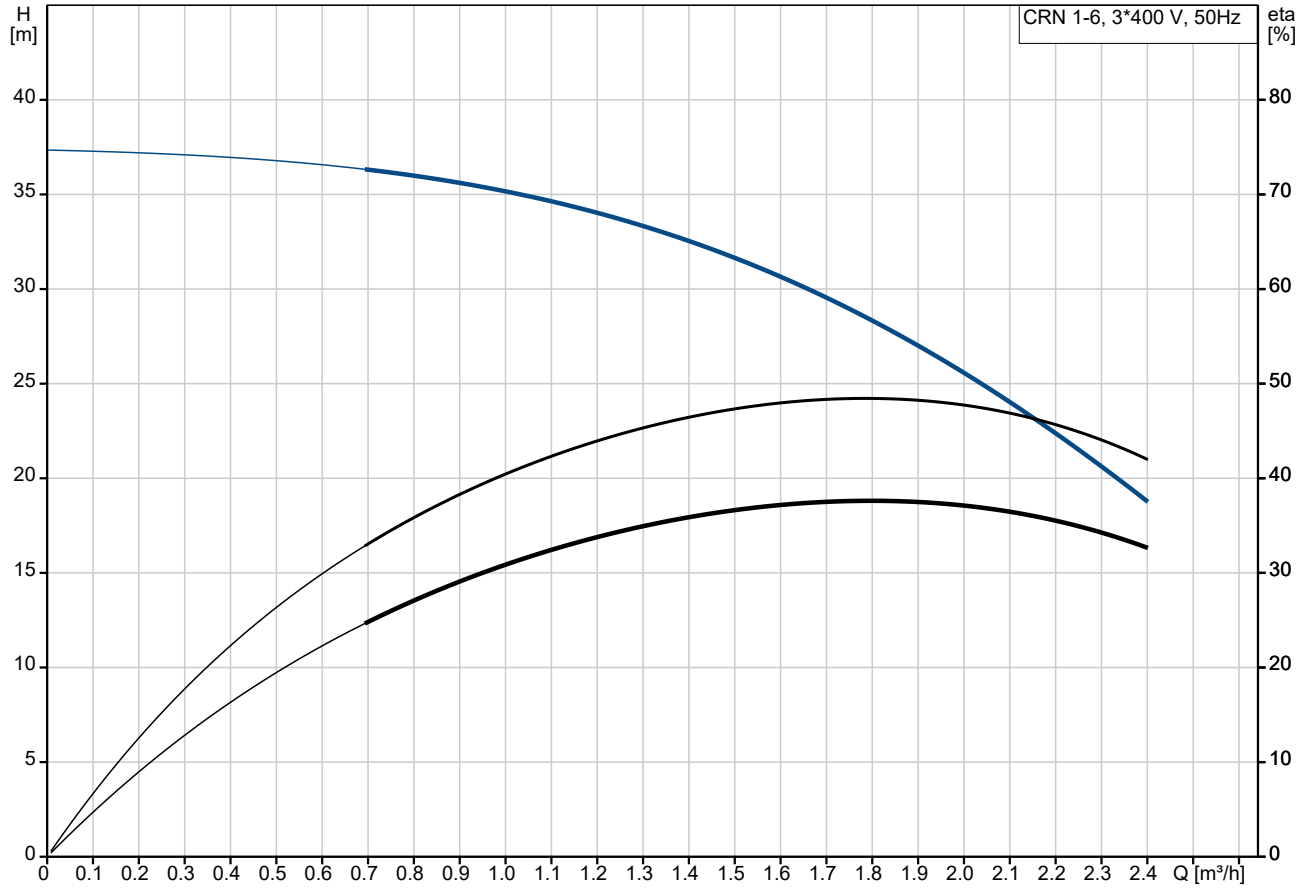

Pumped liquid = Water
Liquid temperature during operation = 20 °C
Density = 998.2 kg/m³

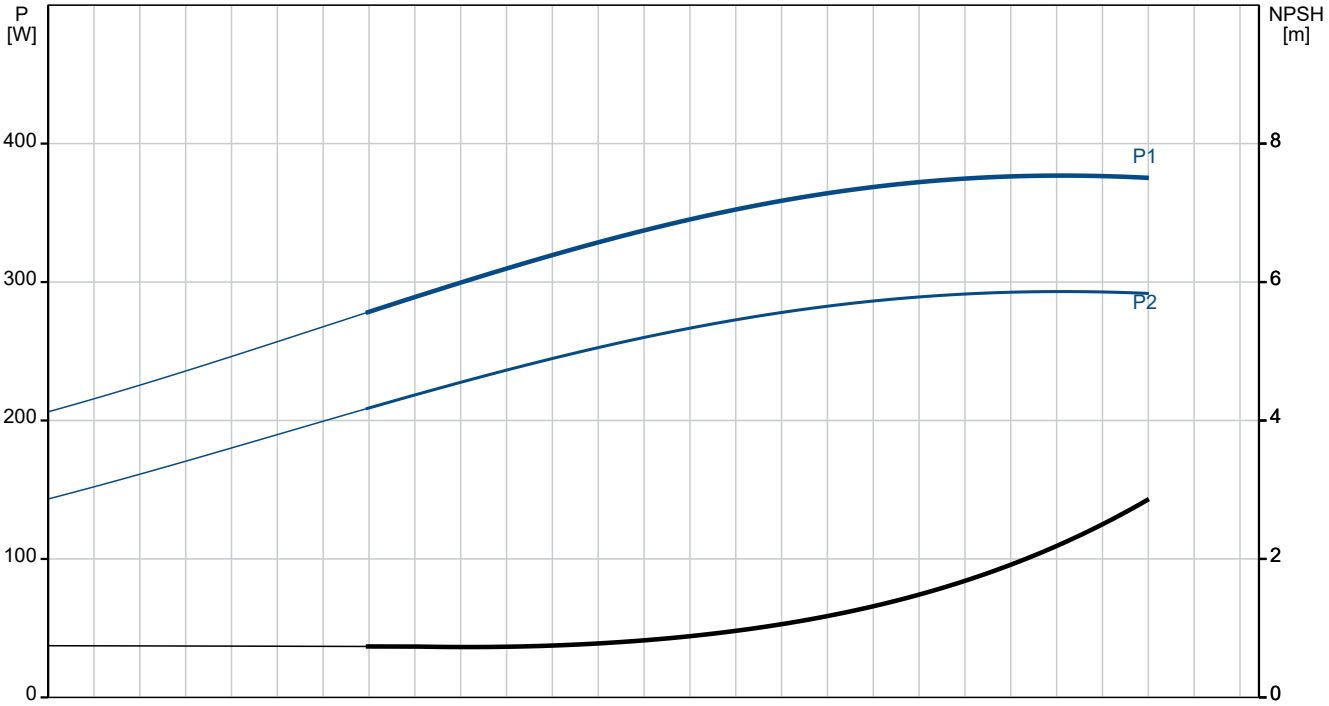

Company name:

Created by:

Phone:

Date: 9/10/2026

Description	Value
General information:	
Product name:	CRN 1-6 A-P-A-E-HQQE
Product No:	96516483
EAN number:	5700396744124
Price:	
Technical:	
Pump speed on which pump data are based:	2873 rpm
Rated flow:	1.8 m³/h
Rated head:	28.3 m
Maximum head:	37.6 m
Stages:	6
Impellers:	6
Number of reduced-diameter impellers:	0
Low NPSH:	N
Pump orientation:	Vertical
Shaft seal arrangement:	Single
Primary shaft seal:	HQQE
Code for shaft seal:	HQQE
Approvals:	CE,EAC,UKCA,SEPRO,RCM,
Approvals for drinking water:	WRAS,ACS
Curve tolerance:	ISO9906:2012 3B
Pump version:	A
Model:	A
Pump type:	CRN
Materials:	
Type key, code for rubber components. E = EPDM, V=FKM:	E
Base:	Stainless steel
	EN 1.4408
	AISI 316
Impeller:	Stainless steel
	EN 1.4401
	AISI 316
Type key, code for materials:	A
Code for rubber:	E
Bearing:	SIC
Installation:	
Maximum ambient temperature:	60 °C
Maximum operating pressure:	25 bar
Max pressure at stated temp:	25 bar / 120 °C
	25 bar / -20 °C
Type key, code for pipework connection:	P
Type of connection:	PJE
Size of inlet connection:	DN 32
	1 1/4 inch
Size of outlet connection:	DN 32
	1 1/4 inch
Pressure rating for connection:	PN 50
Flange size for motor:	FT85
Terminal box position:	6
Connect code:	P
Liquid:	
Pumped liquid:	Water
Liquid temperature range:	-20 .. 120 °C
Selected liquid temperature:	20 °C

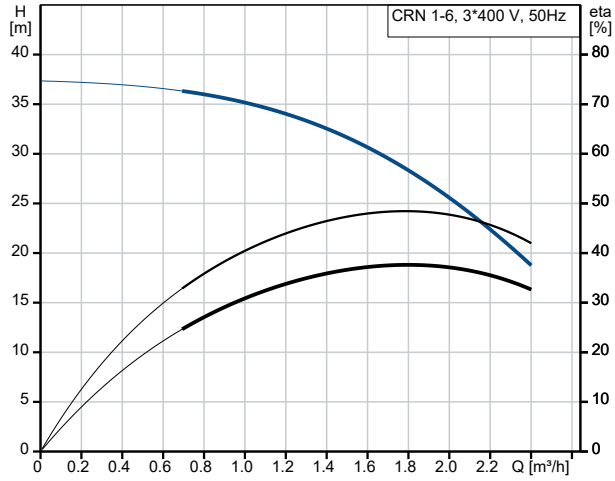

Pumped liquid = Water
Liquid temperature during operation = 20 °C
Density = 998.2 kg/m³

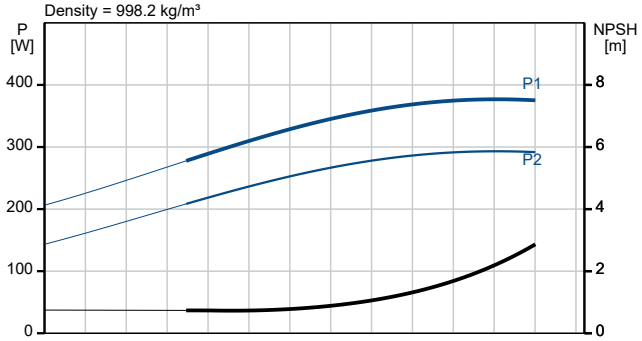

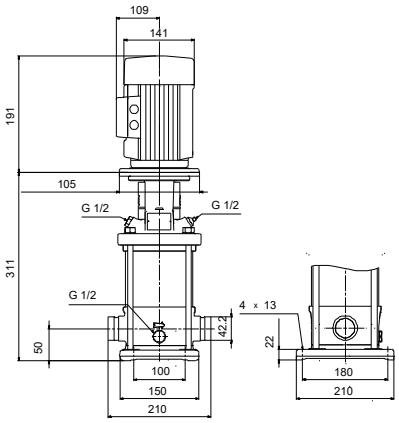

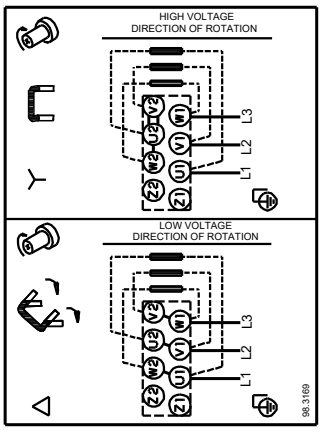

Company name:
Created by:
Phone:

Date: 9/10/2026

Description	Value
Density:	998.2 kg/m³
Electrical data:	
Motor standard:	IEC
Motor type:	71A
Rated power - P2:	0.37 kW
Power (P2) required by pump:	0.37 kW
Mains frequency:	50 Hz
Rated voltage:	3 x 220-240D/380-415Y V
Rated current:	1.74/1.00 A
Starting current:	490-530 %
Cos phi - power factor:	0.80-0.70
Rated speed:	2850-2880 rpm
IE Efficiency class:	IE3
Motor efficiency at full load:	73.8 %
Motor efficiency at 3/4 load:	79.0-76.5 %
Motor efficiency at 1/2 load:	75.5-71.5 %
Number of poles:	2
Enclosure class (IEC 34-5):	IP55 Dust/Jetting
Insulation class (IEC 85):	F
Built-in motor protection:	NONE
Motor No:	85805102
Controls:	
Terminal box position:	6
Frequency converter:	None
Others:	
Minimum efficiency index, MEI ≥:	0.70
Net weight:	17.8 kg
Gross weight:	20.4 kg
Shipping volume:	0.054 m³
Danish VVS No.:	385910006

Company name:
Created by:
Phone:

Date: 9/10/2026

96516483 CRN 1-6 A-P-A-E-HQQE 50 Hz

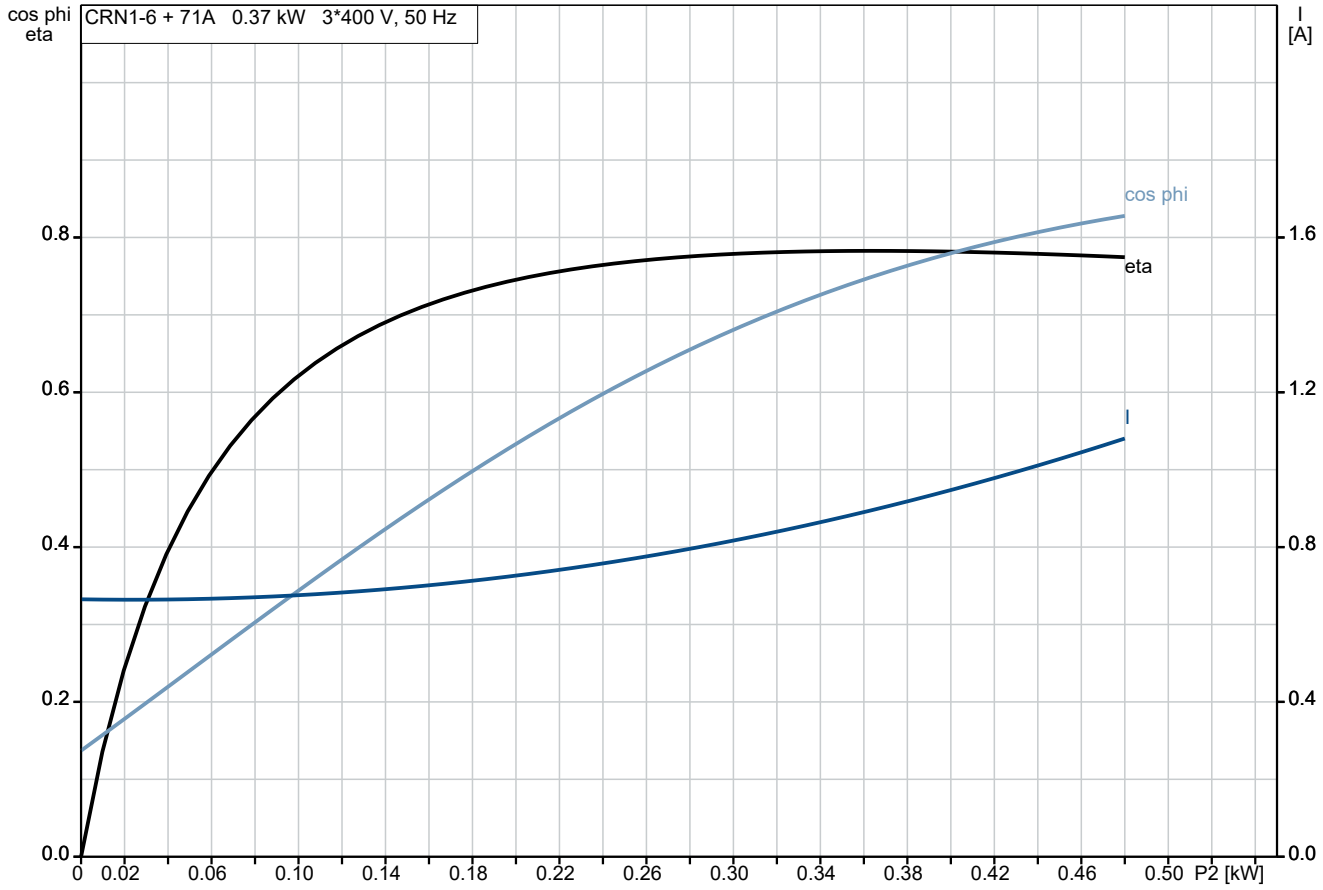

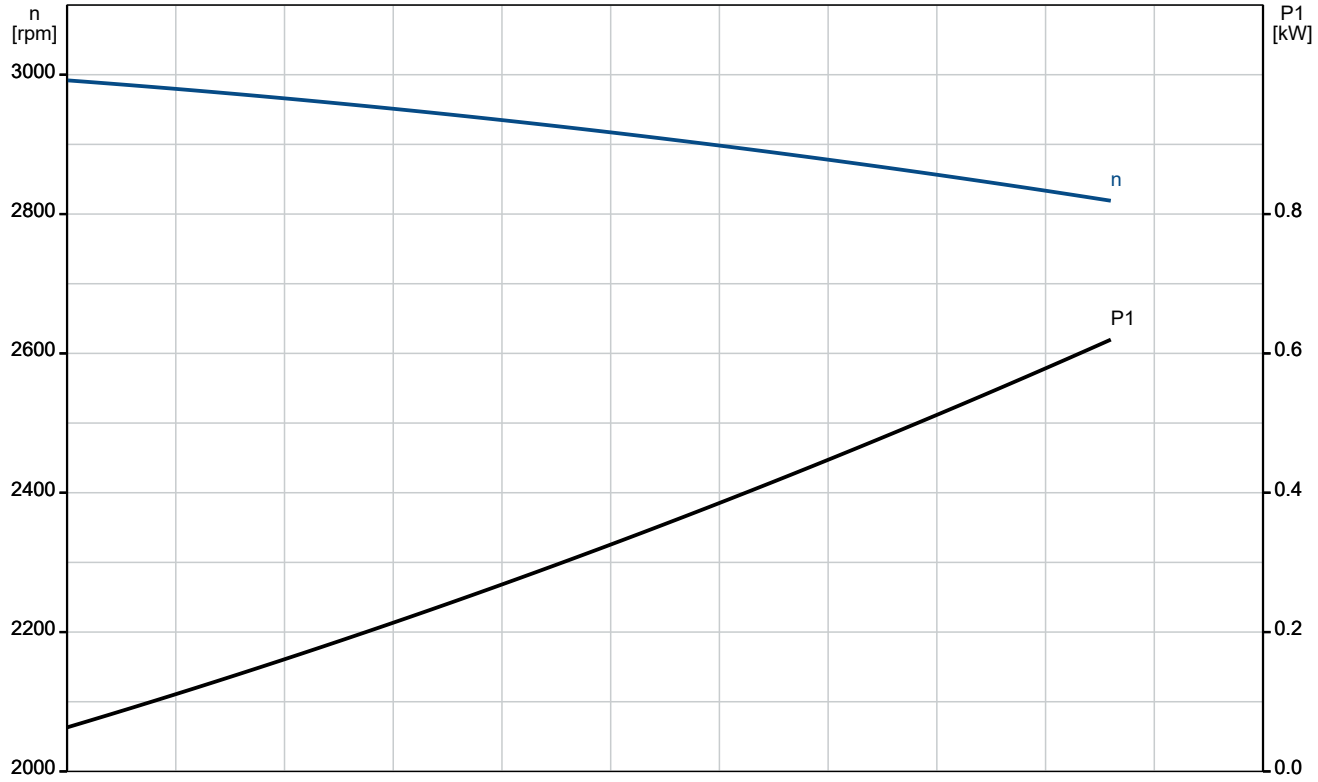

Company name:
Created by:
Phone:

Date: 9/10/2026

96516483 CRN 1-6 A-P-A-E-HQQE 50 Hz

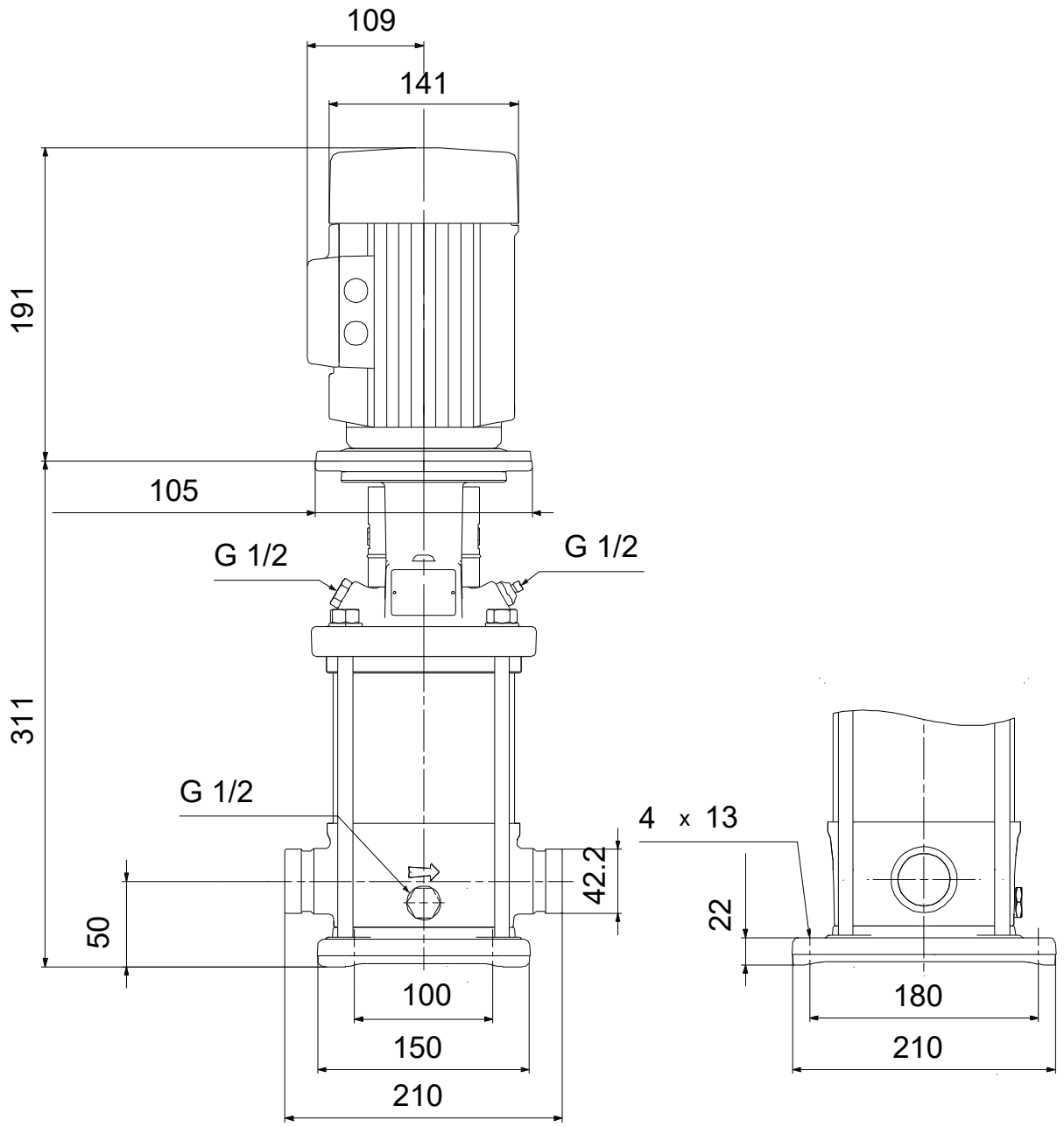

Note! All units are in [mm] unless others are stated.
Disclaimer: This simplified dimensional drawing does not show all details.

Company name:
Created by:
Phone:

Date: 9/10/2026

96516483 CRN 1-6 A-P-A-E-HQQE 50 Hz

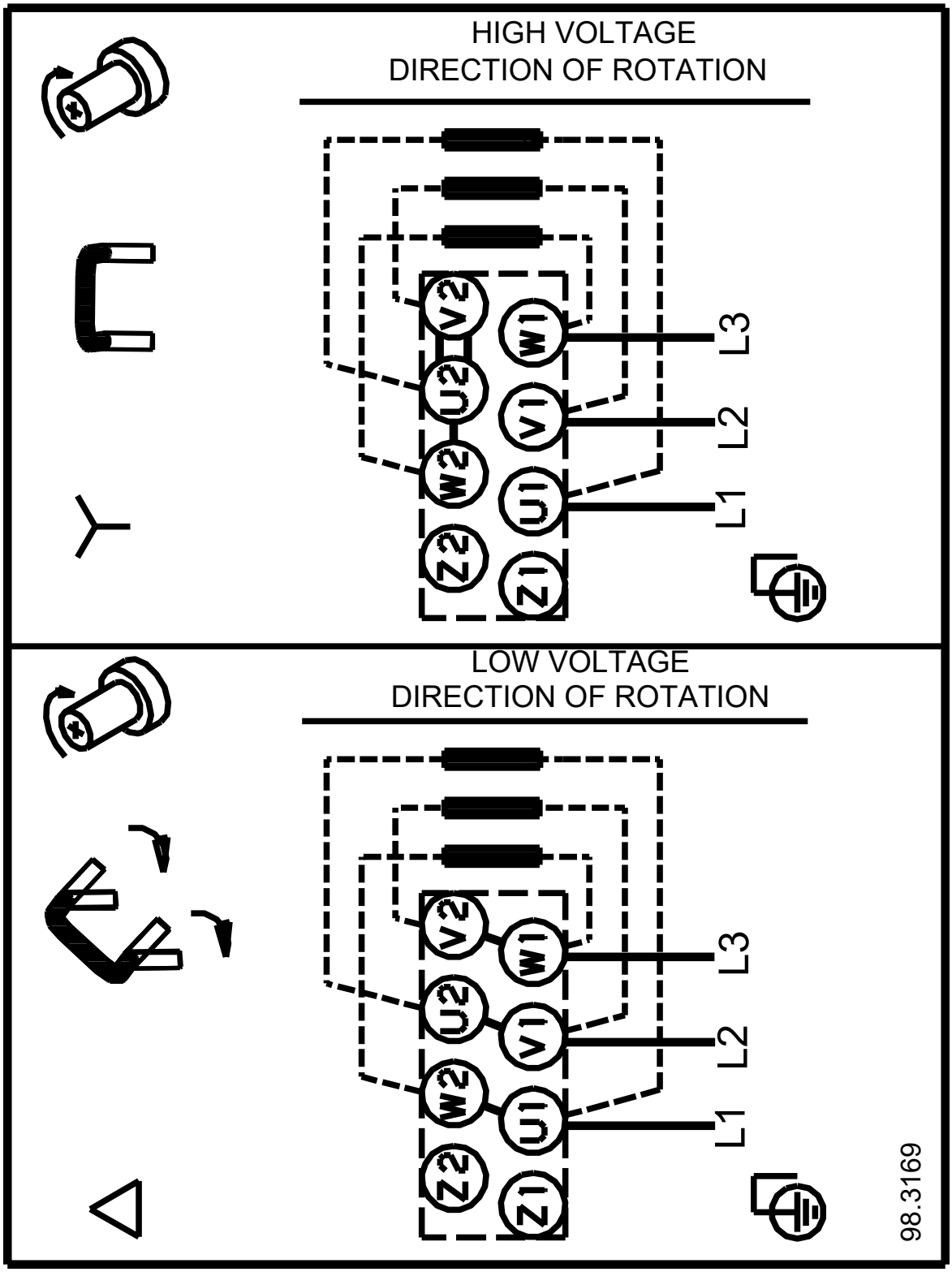

Note! All units are in [mm] unless others are stated.