Company name:
Created by:
Phone:

Date: 9/10/2026

Qty.	Description
1	**CR 45-8-2 A-F-A-E-HQQE**

Note! Product picture may differ from actual product

Product No.: 96122810

Vertical, non-self-priming, multistage, in-line, centrifugal pump for installation in pipe systems and mounting on a foundation.

The pump has the following characteristics:
- Impellers and intermediate chambers are made of Stainless steel, EN 1.4301.
- Pump head and base are made of Cast iron.
- The shaft seal has assembly length according to EN 12756.
- Power transmission is via cast iron split coupling.
- Pipework connection is via DIN flanges.

The motor is a 3-phase AC motor.

Controls:

Terminal box position:	6
Frequency converter:	None

Liquid:

Pumped liquid:	Water
Liquid temperature range:	-30 .. 120 °C
Selected liquid temperature:	20 °C
Density:	998.2 kg/m³

Technical:

Pump speed on which pump data are based:	2951 rpm
Rated flow:	45 m³/h
Rated head:	155.8 m
Pump orientation:	Vertical
Shaft seal arrangement:	Single
Primary shaft seal:	HQQE
Code for shaft seal:	HQQE
Approvals:	CE,EAC,UKCA
Approvals for drinking water:	WRAS,ACS
Curve tolerance:	ISO9906:2012 3B

Materials:

Company name:
Created by:
Phone:

Date: 9/10/2026

Qty.	Description	
1	Type key, code for rubber components. E = EPDM, V=FKM:	E
	Base:	Cast iron
		EN 1563 EN-GJS-500-7
		ASTM A536 80-55-06
	Impeller:	Stainless steel
		EN 1.4301
		AISI 304
	Type key, code for materials:	A
	Bearing:	SIC
	Support bearing:	Graflon
	Installation:	
	Maximum ambient temperature:	55 °C
	Maximum operating pressure:	30 bar
	Max pressure at stated temp:	30 bar / 120 °C
		30 bar / -30 °C
	Type of connection:	DIN
	Size of inlet connection:	DN 80
	Size of outlet connection:	DN 80
	Pressure rating for connection:	PN 40
	Flange size for motor:	FF350
	Terminal box position:	6
	Electrical data:	
	Motor standard:	IEC
	Motor type:	INNOMOTICS
	Rated power - P2:	30 kW
	Power (P2) required by pump:	30 kW
	Mains frequency:	50 Hz
	Rated voltage:	3 x 380-420D/660-725Y V
	Rated current:	53/31 A
	Starting current:	700 %
	Cos phi - power factor:	0.87
	Rated speed:	2955 rpm
	IE efficiency:	IE3 93,3%
	IE Efficiency class:	IE3
	Motor efficiency at full load:	93.3 %
	Motor efficiency at 3/4 load:	93.5 %
	Motor efficiency at 1/2 load:	92.9 %
	Number of poles:	2
	Enclosure class (IEC 34-5):	IP55
	Insulation class (IEC 85):	F
	Built-in motor protection:	PTC
	Motor No:	81U15332
	Others:	
	Minimum efficiency index, MEI ≥:	0.70

Company name:
Created by:
Phone:

Date: 9/10/2026

Qty.	Description	
1	Net weight:	328 kg
	Gross weight:	373 kg
	Shipping volume:	0.808 m³
	Danish VVS No.:	385907082
	Finnish LVI No.:	4925496

Company name:
Created by:
Phone:

Date: 9/10/2026

96122810 CR 45-8-2 A-F-A-E-HQQE 50 Hz

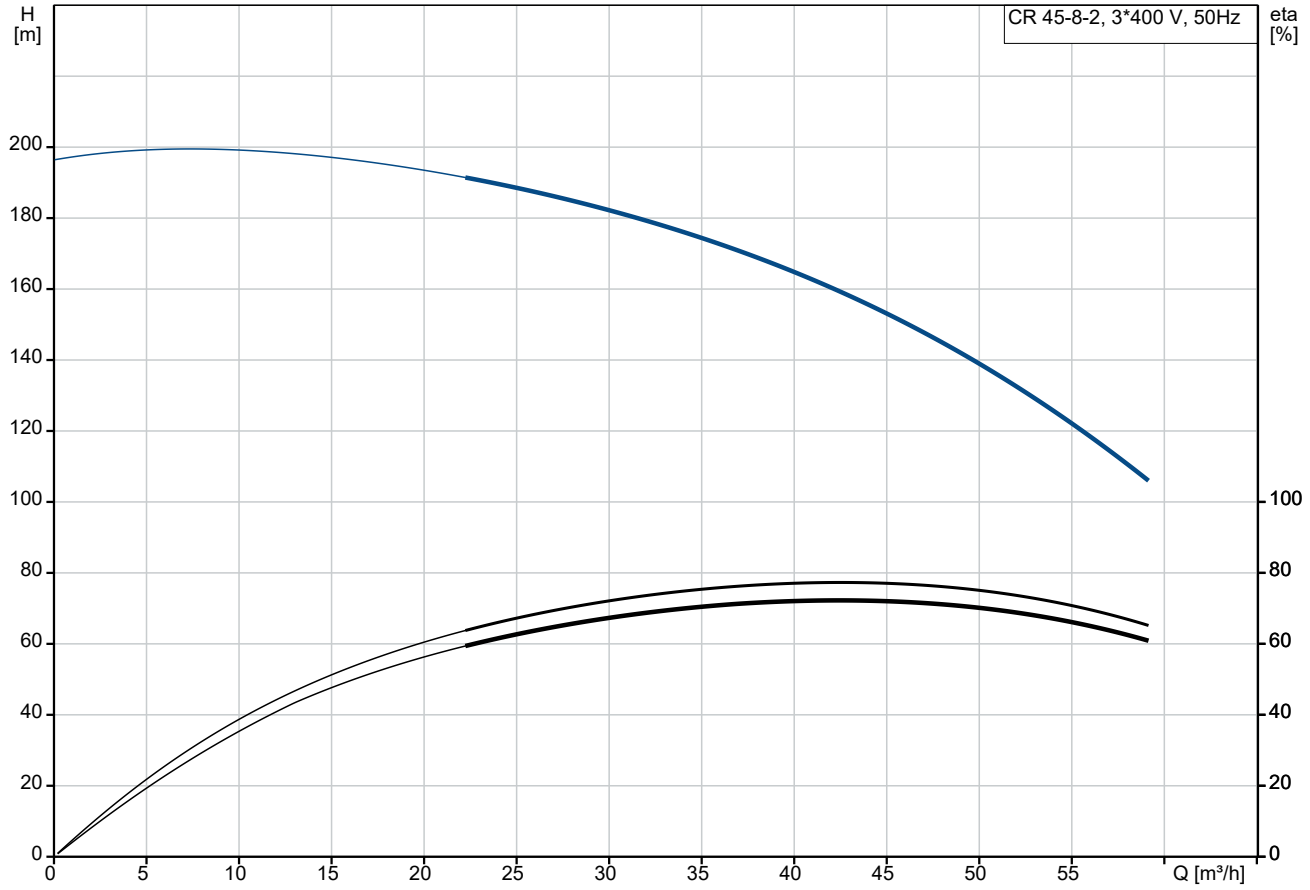

Pumped liquid = Water
Liquid temperature during operation = 20 °C
Density = 998.2 kg/m³

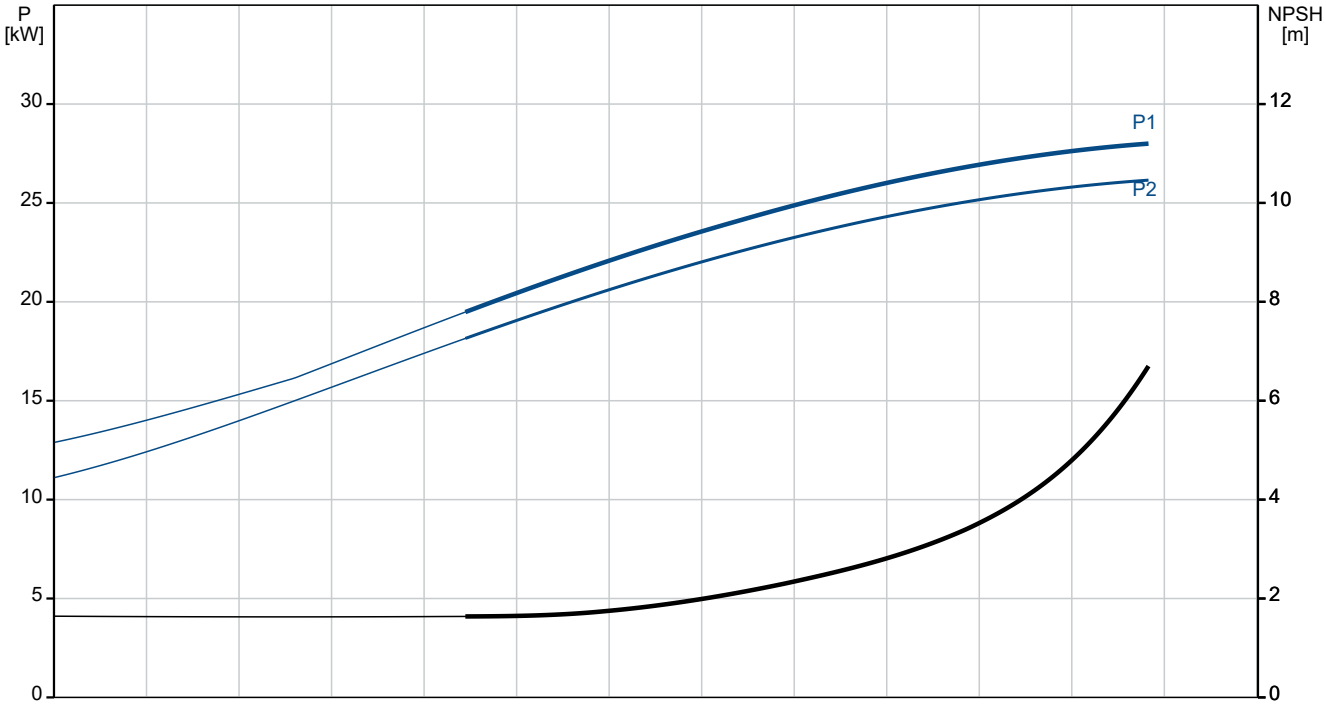

Company name:
Created by:
Phone:

Date: 9/10/2026

Description	Value
General information:	
Product name:	CR 45-8-2 A-F-A-E-HQQE
Product No:	96122810
EAN number:	5700396688541
Price:	
Technical:	
Pump speed on which pump data are based:	2951 rpm
Rated flow:	45 m³/h
Rated head:	155.8 m
Maximum head:	194.4 m
Stages:	8
Impellers:	8
Number of reduced-diameter impellers:	2
Low NPSH:	N
Pump orientation:	Vertical
Shaft seal arrangement:	Single
Primary shaft seal:	HQQE
Code for shaft seal:	HQQE
Approvals:	CE,EAC,UKCA
Approvals for drinking water:	WRAS,ACS
Curve tolerance:	ISO9906:2012 3B
Pump version:	A
Model:	B
Pump type:	CR
Materials:	
Type key, code for rubber components. E = EPDM, V=FKM:	E
Base:	Cast iron
	EN 1563 EN-GJS-500-7
	ASTM A536 80-55-06
Impeller:	Stainless steel
	EN 1.4301
	AISI 304
Type key, code for materials:	A
Code for rubber:	E
Bearing:	SIC
Support bearing:	Graflon
Installation:	
Maximum ambient temperature:	55 °C
Maximum operating pressure:	30 bar
Max pressure at stated temp:	30 bar / 120 °C
	30 bar / -30 °C
Type key, code for pipework connection:	F
Type of connection:	DIN
Size of inlet connection:	DN 80
Size of outlet connection:	DN 80
Pressure rating for connection:	PN 40
Flange size for motor:	FF350
Terminal box position:	6
Connect code:	F
Liquid:	
Pumped liquid:	Water
Liquid temperature range:	-30 .. 120 °C
Selected liquid temperature:	20 °C
Density:	998.2 kg/m³

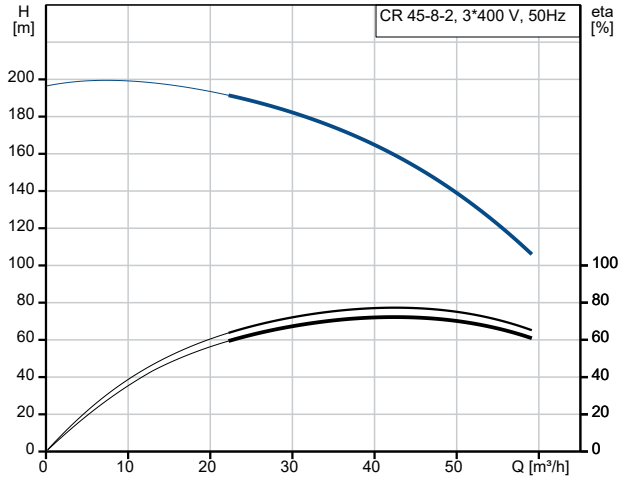

Pumped liquid = Water
Liquid temperature during operation = 20 °C
Density = 998.2 kg/m³

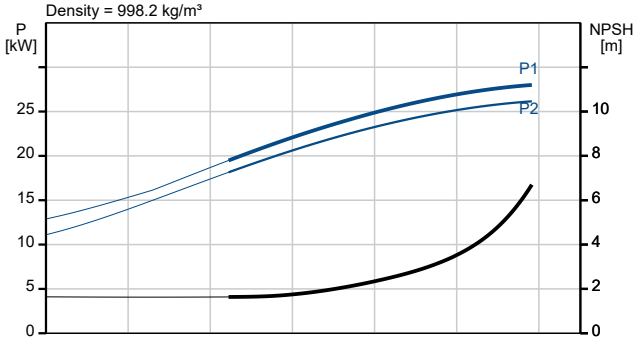

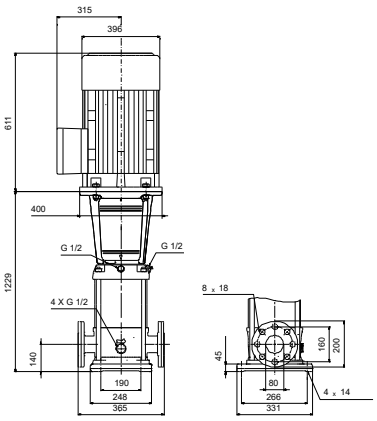

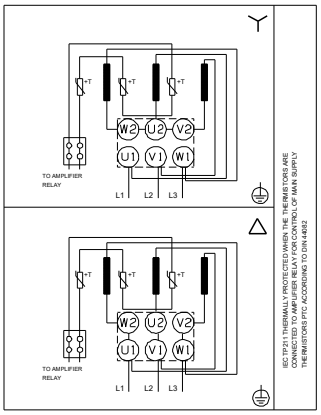

Company name:
Created by:
Phone:

Date: 9/10/2026

Description	Value
Electrical data:	
Motor standard:	IEC
Motor type:	INNOMOTICS
Rated power - P2:	30 kW
Power (P2) required by pump:	30 kW
Mains frequency:	50 Hz
Rated voltage:	3 x 380-420D/660-725Y V
Rated current:	53/31 A
Starting current:	700 %
Cos phi - power factor:	0.87
Rated speed:	2955 rpm
IE efficiency:	IE3 93,3%
IE Efficiency class:	IE3
Motor efficiency at full load:	93.3 %
Motor efficiency at 3/4 load:	93.5 %
Motor efficiency at 1/2 load:	92.9 %
Number of poles:	2
Enclosure class (IEC 34-5):	IP55
Insulation class (IEC 85):	F
Built-in motor protection:	PTC
Motor No:	81U15332
Controls:	
Terminal box position:	6
Frequency converter:	None
Others:	
Minimum efficiency index, MEI ≥:	0.70
Net weight:	328 kg
Gross weight:	373 kg
Shipping volume:	0.808 m³
Danish VVS No.:	385907082
Finnish LVI No.:	4925496

Company name:
Created by:
Phone:

Date: 9/10/2026

96122810 CR 45-8-2 A-F-A-E-HQQE 50 Hz

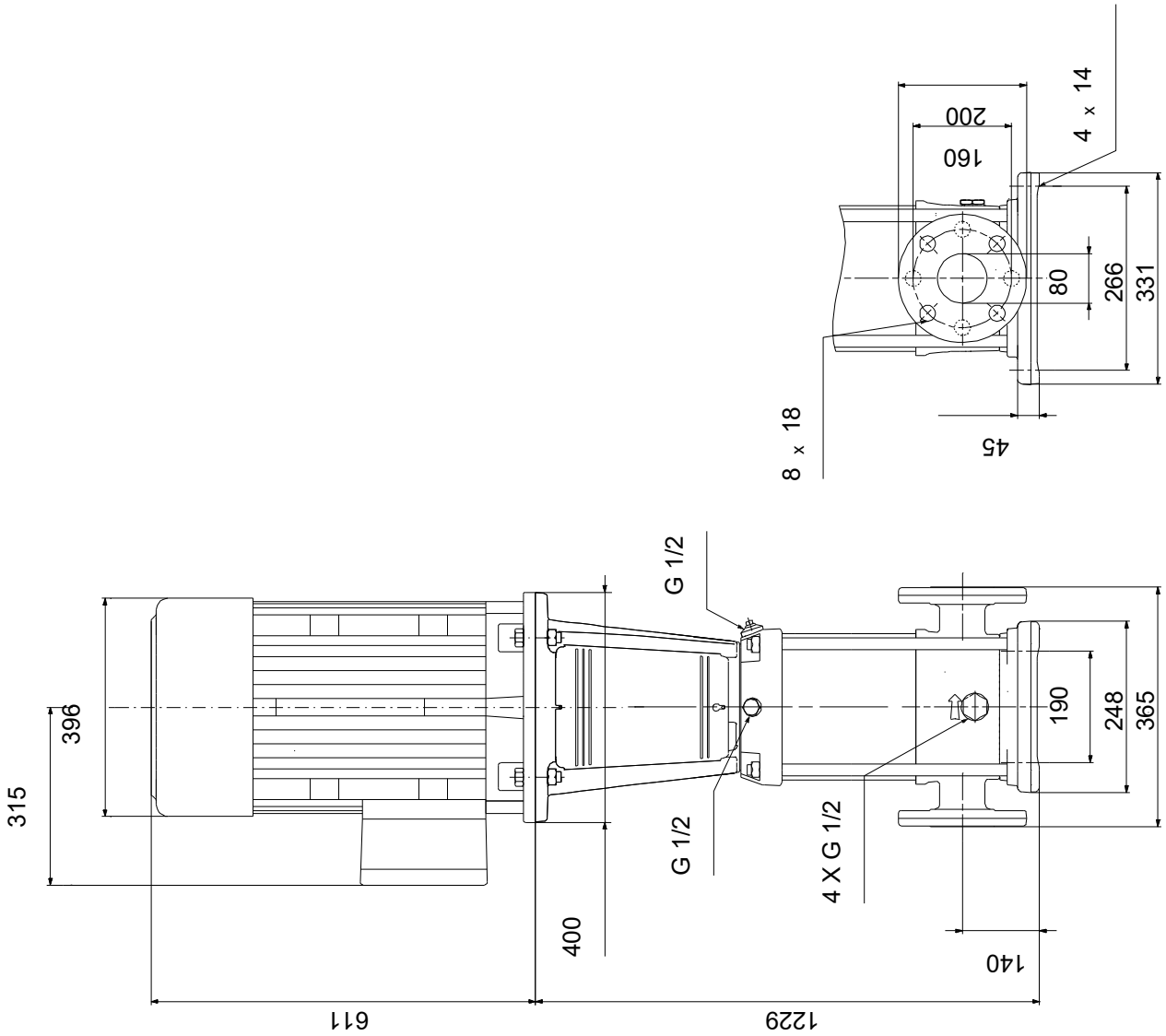

Note! All units are in [mm] unless others are stated.
Disclaimer: This simplified dimensional drawing does not show all details.

Company name:
Created by:
Phone:

Date: 9/10/2026

96122810 CR 45-8-2 A-F-A-E-HQQE 50 Hz

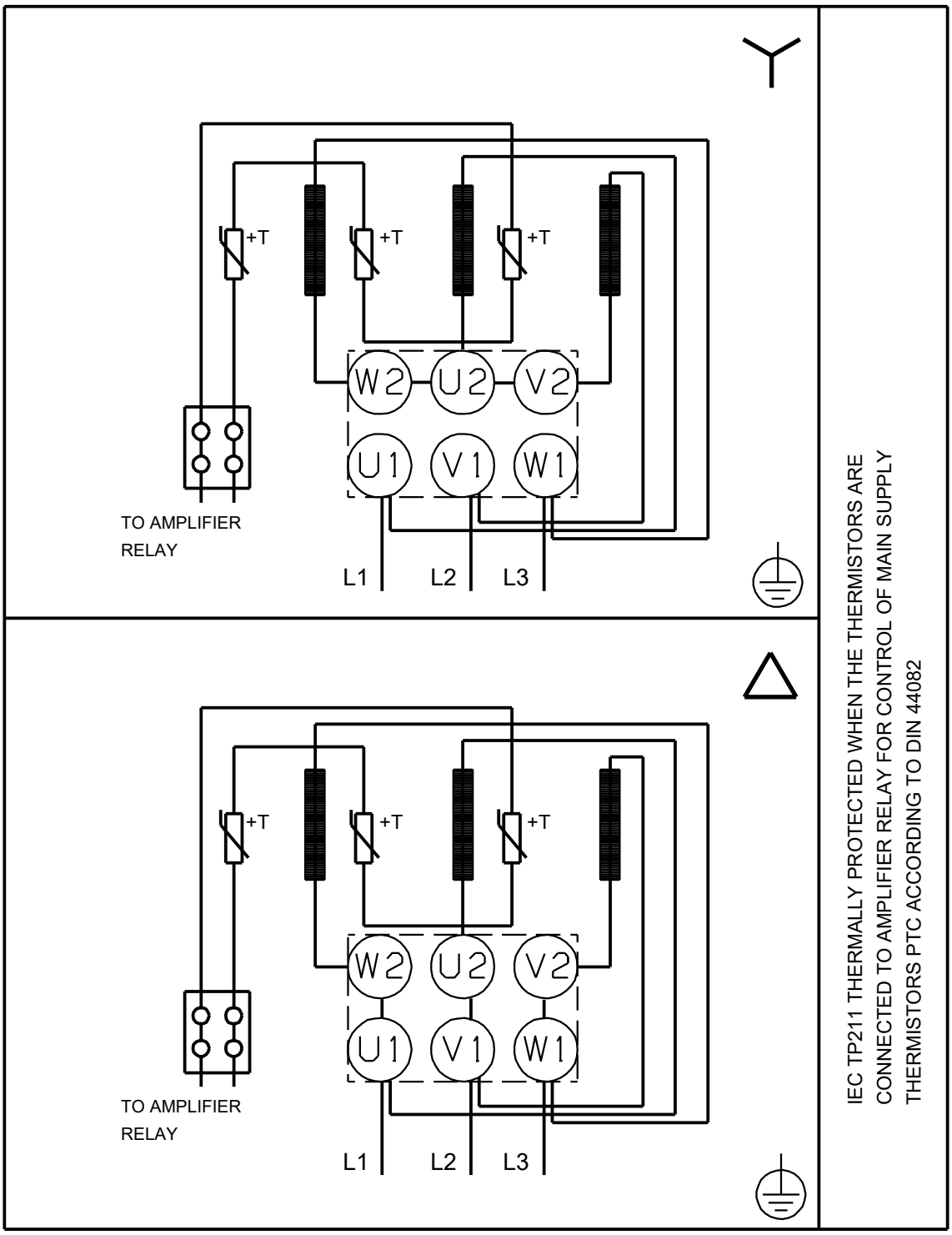

Note! All units are in [mm] unless others are stated.