**Company name:**
**Created by:**
**Phone:**

**Date:** 9/9/2026

| Qty. | Description |
|---|---|
| 1 | **CR 32-11-2 A-F-A-E-HQQE** |

**Note! Product picture may differ from actual product**

Product No.: 96122026

Vertical, non-self-priming, multistage, in-line, centrifugal pump for installation in pipe systems and mounting on a foundation.

The pump has the following characteristics:
- Impellers and intermediate chambers are made of Stainless steel, EN 1.4301.
- Pump head and base are made of Cast iron.
- The shaft seal has assembly length according to EN 12756.
- Power transmission is via cast iron split coupling.
- Pipework connection is via DIN flanges.

The motor is a 3-phase AC motor.

Controls:

| | |
|---|---|
| Terminal box position: | 6 |
| Frequency converter: | None |

Liquid:

| | |
|---|---|
| Pumped liquid: | Water |
| Liquid temperature range: | -30 .. 120 °C |
| Selected liquid temperature: | 20 °C |
| Density: | 998.2 kg/m³ |

Technical:

| | |
|---|---|
| Pump speed on which pump data are based: | 2947 rpm |
| Rated flow: | 30 m³/h |
| Rated head: | 162.8 m |
| Pump orientation: | Vertical |
| Shaft seal arrangement: | Single |
| Primary shaft seal: | HQQE |
| Code for shaft seal: | HQQE |
| Approvals: | CE,EAC,UKCA,SEPRO, |
| Approvals for drinking water: | WRAS,ACS |
| Curve tolerance: | ISO9906:2012 3B |

Materials:

**Company name:**
**Created by:**
**Phone:**

**Date:** 9/9/2026

| Qty. | Description | |
|---|---|---|
| 1 | Type key, code for rubber components. E = EPDM, V=FKM: | E |
| | Base: | Cast iron |
| | | EN 1563 EN-GJS-500-7 |
| | | ASTM A536 80-55-06 |
| | Impeller: | Stainless steel |
| | | EN 1.4301 |
| | | AISI 304 |
| | Type key, code for materials: | A |
| | Bearing: | SIC |
| | Support bearing: | Graflon |
| | | |
| | Installation: | |
| | Maximum ambient temperature: | 60 °C |
| | Maximum operating pressure: | 30 bar |
| | Max pressure at stated temp: | 30 bar / 120 °C |
| | | 30 bar / -30 °C |
| | Type of connection: | DIN |
| | Size of inlet connection: | DN 65 |
| | Size of outlet connection: | DN 65 |
| | Pressure rating for connection: | PN 40 |
| | Flange size for motor: | FF300 |
| | Terminal box position: | 6 |
| | | |
| | Electrical data: | |
| | Motor standard: | IEC |
| | Motor type: | 180MB |
| | Rated power - P2: | 22 kW |
| | Power (P2) required by pump: | 22 kW |
| | Mains frequency: | 50 Hz |
| | Rated voltage: | 3 x 380-415D/660-690Y V |
| | Rated current: | 39.5/22.8 A |
| | Starting current: | 830 % |
| | Cos phi - power factor: | 0.90 |
| | Rated speed: | 2950 rpm |
| | IE Efficiency class: | IE3 |
| | Motor efficiency at full load: | 92.7 % |
| | Motor efficiency at 3/4 load: | 93.7-94.0 % |
| | Motor efficiency at 1/2 load: | 94.4-94.1 % |
| | Number of poles: | 2 |
| | Enclosure class (IEC 34-5): | IP55 Dust/Jetting |
| | Insulation class (IEC 85): | F |
| | Built-in motor protection: | PTC |
| | Motor No: | 85U17530 |
| | | |
| | Others: | |
| | Minimum efficiency index, MEI ≥: | 0.70 |
| | Net weight: | 220 kg |

**Company name:**
**Created by:**
**Phone:**

**Date:** 9/9/2026

| Qty. | Description | |
|---|---|---|
| 1 | Gross weight: | 265 kg |
| | Shipping volume: | 0.808 m³ |
| | Danish VVS No.: | 385906112 |
| | Swedish RSK No.: | 5824888 |
| | Finnish LVI No.: | 4925475 |

**Company name:**
**Created by:**
**Phone:**

**Date:** 9/9/2026

# 96122026 CR 32-11-2 A-F-A-E-HQQE 50 Hz

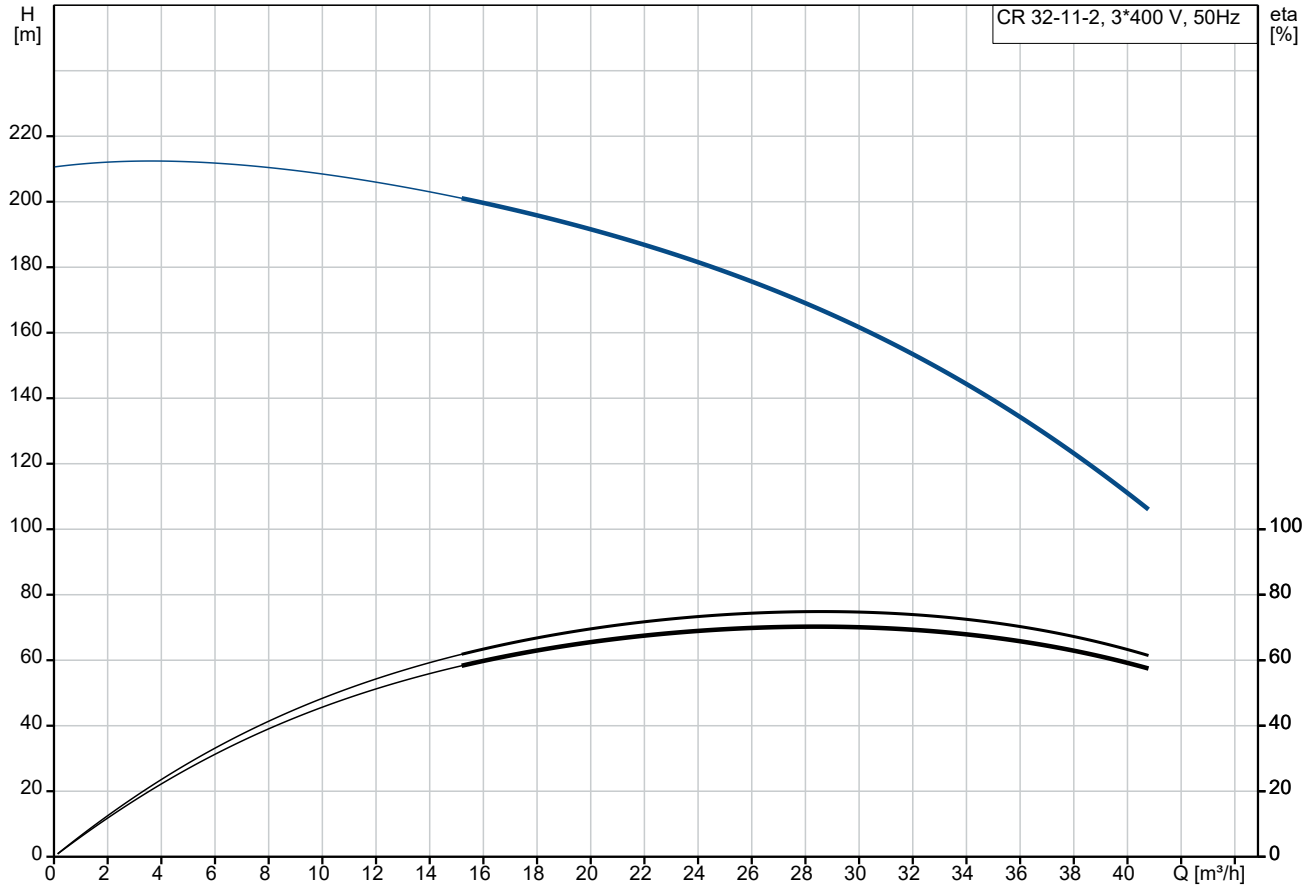


Pumped liquid = Water
Liquid temperature during operation = 20 °C
Density = 998.2 kg/m³

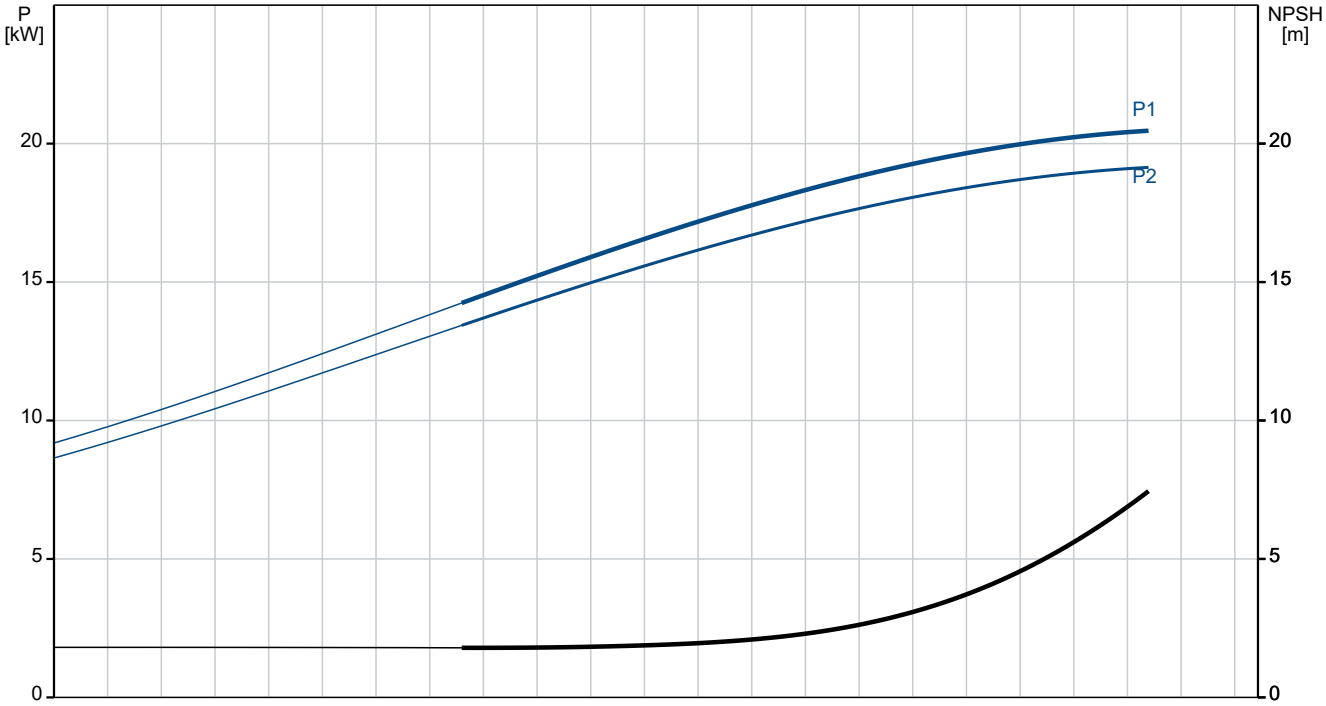

**Company name:**

**Created by:**

**Phone:**

**Date:** 9/9/2026

| Description | Value |
|---|---|
| **General information:** | |
| Product name: | CR 32-11-2 A-F-A-E-HQQE |
| Product No: | 96122026 |
| EAN number: | 5700396680705 |
| Price: | |
| **Technical:** | |
| Pump speed on which pump data are based: | 2947 rpm |
| Rated flow: | 30 m³/h |
| Rated head: | 162.8 m |
| Maximum head: | 206.9 m |
| Stages: | 11 |
| Impellers: | 11 |
| Number of reduced-diameter impellers: | 2 |
| Low NPSH: | N |
| Pump orientation: | Vertical |
| Shaft seal arrangement: | Single |
| Primary shaft seal: | HQQE |
| Code for shaft seal: | HQQE |
| Approvals: | CE,EAC,UKCA,SEPRO, |
| Approvals for drinking water: | WRAS,ACS |
| Curve tolerance: | ISO9906:2012 3B |
| Pump version: | A |
| Model: | B |
| Pump type: | CR |
| **Materials:** | |
| Type key, code for rubber components. E = EPDM, V=FKM: | E |
| Base: | Cast iron |
| | EN 1563 EN-GJS-500-7 |
| | ASTM A536 80-55-06 |
| Impeller: | Stainless steel |
| | EN 1.4301 |
| | AISI 304 |
| Type key, code for materials: | A |
| Code for rubber: | E |
| Bearing: | SIC |
| Support bearing: | Graflon |
| **Installation:** | |
| Maximum ambient temperature: | 60 °C |
| Maximum operating pressure: | 30 bar |
| Max pressure at stated temp: | 30 bar / 120 °C |
| | 30 bar / -30 °C |
| Type key, code for pipework connection: | F |
| Type of connection: | DIN |
| Size of inlet connection: | DN 65 |
| Size of outlet connection: | DN 65 |
| Pressure rating for connection: | PN 40 |
| Flange size for motor: | FF300 |
| Terminal box position: | 6 |
| Connect code: | F |
| **Liquid:** | |
| Pumped liquid: | Water |
| Liquid temperature range: | -30 .. 120 °C |
| Selected liquid temperature: | 20 °C |
| Density: | 998.2 kg/m³ |

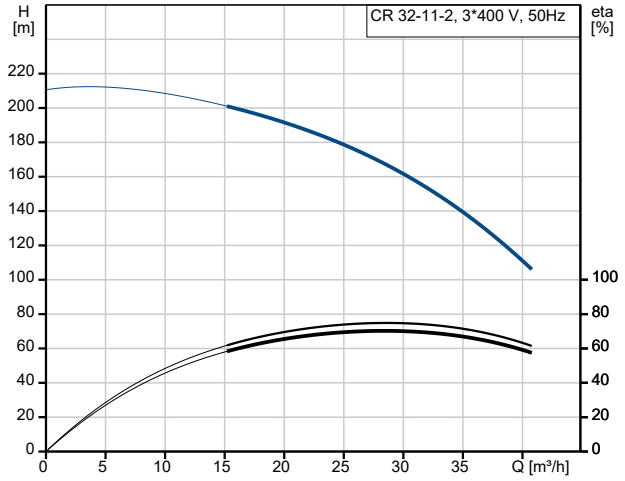


Pumped liquid = Water
Liquid temperature during operation = 20 °C
Density = 998.2 kg/m³

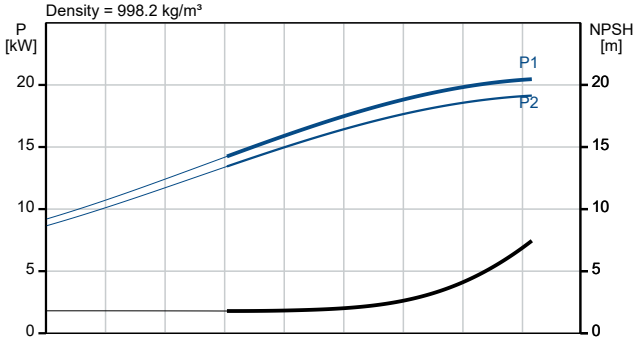


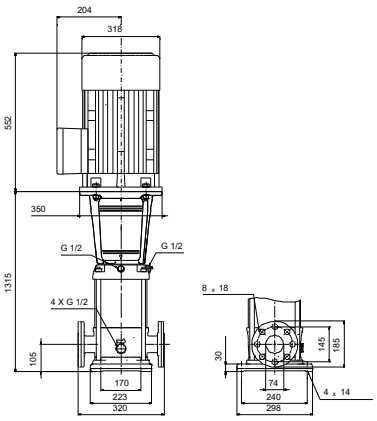


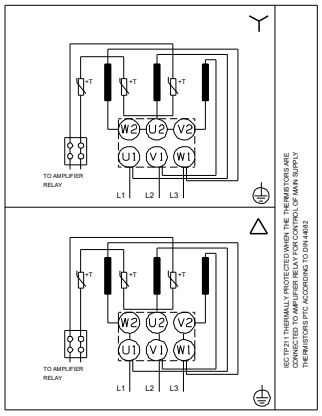

**Company name:**
**Created by:**
**Phone:**

**Date:** 9/9/2026

| Description | Value |
|---|---|
| **Electrical data:** | |
| Motor standard: | IEC |
| Motor type: | 180MB |
| Rated power - P2: | 22 kW |
| Power (P2) required by pump: | 22 kW |
| Mains frequency: | 50 Hz |
| Rated voltage: | 3 x 380-415D/660-690Y V |
| Rated current: | 39.5/22.8 A |
| Starting current: | 830 % |
| Cos phi - power factor: | 0.90 |
| Rated speed: | 2950 rpm |
| IE Efficiency class: | IE3 |
| Motor efficiency at full load: | 92.7 % |
| Motor efficiency at 3/4 load: | 93.7-94.0 % |
| Motor efficiency at 1/2 load: | 94.4-94.1 % |
| Number of poles: | 2 |
| Enclosure class (IEC 34-5): | IP55 Dust/Jetting |
| Insulation class (IEC 85): | F |
| Built-in motor protection: | PTC |
| Motor No: | 85U17530 |
| **Controls:** | |
| Terminal box position: | 6 |
| Frequency converter: | None |
| **Others:** | |
| Minimum efficiency index, MEI ≥: | 0.70 |
| Net weight: | 220 kg |
| Gross weight: | 265 kg |
| Shipping volume: | 0.808 m³ |
| Danish VVS No.: | 385906112 |
| Swedish RSK No.: | 5824888 |
| Finnish LVI No.: | 4925475 |

**Company name:**
**Created by:**
**Phone:**

**Date:** 9/9/2026

# 96122026 CR 32-11-2 A-F-A-E-HQQE 50 Hz

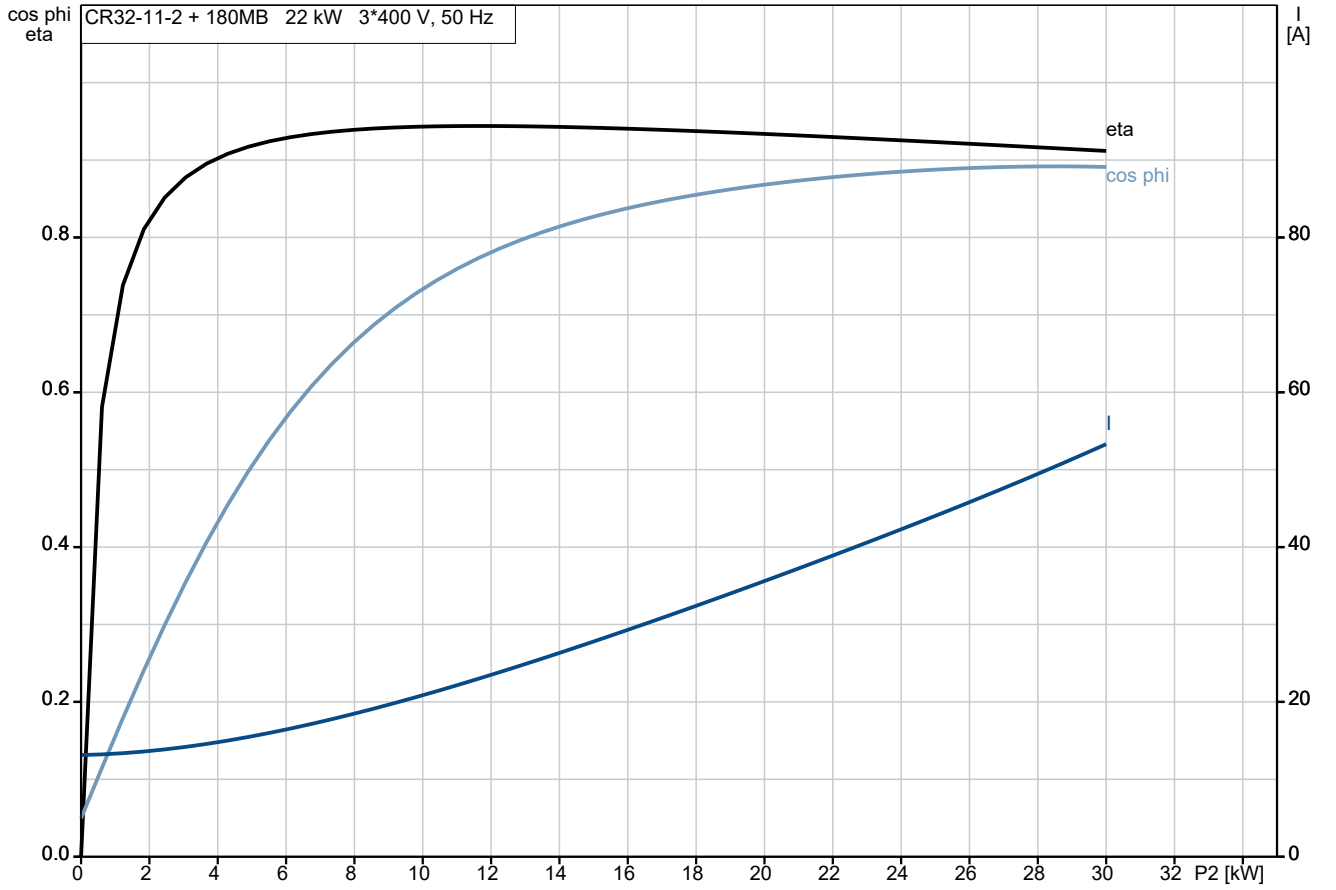


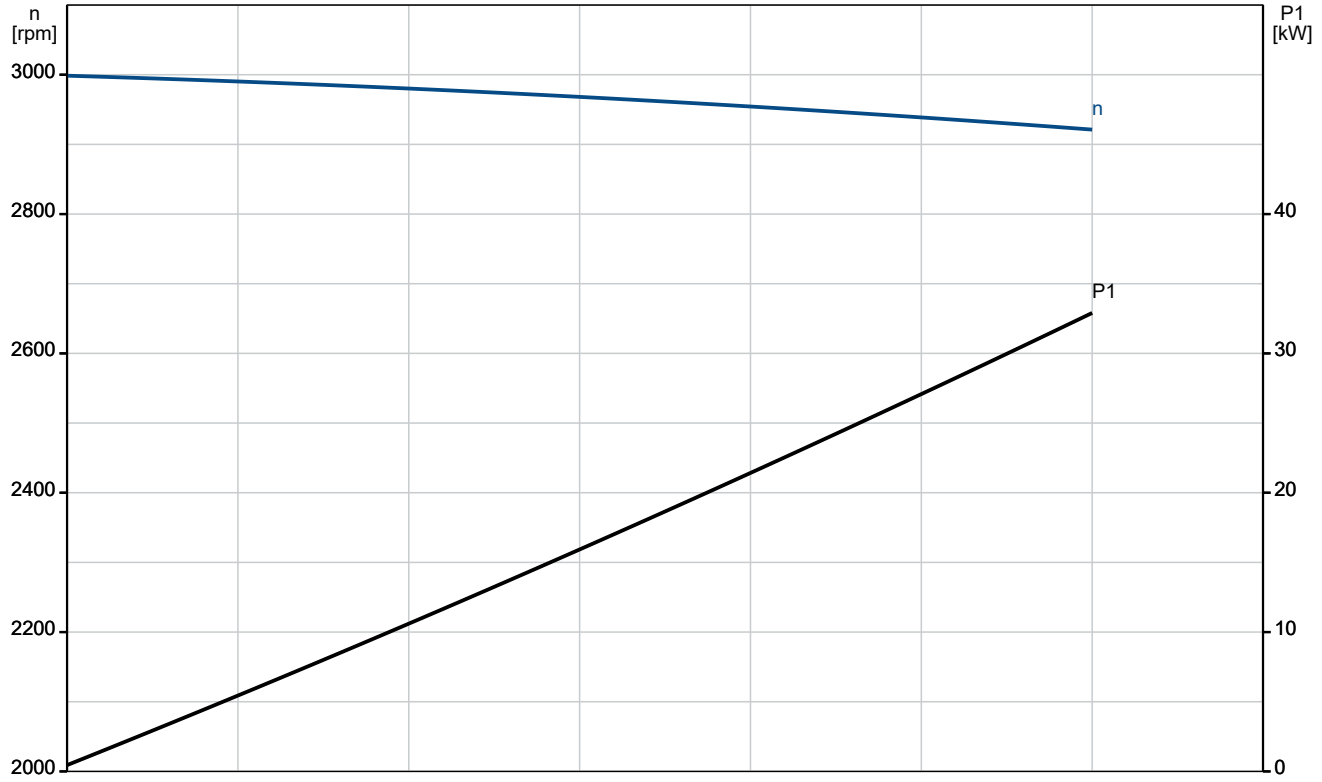

**Company name:**
**Created by:**
**Phone:**

**Date:** 9/9/2026

# 96122026 CR 32-11-2 A-F-A-E-HQQE 50 Hz

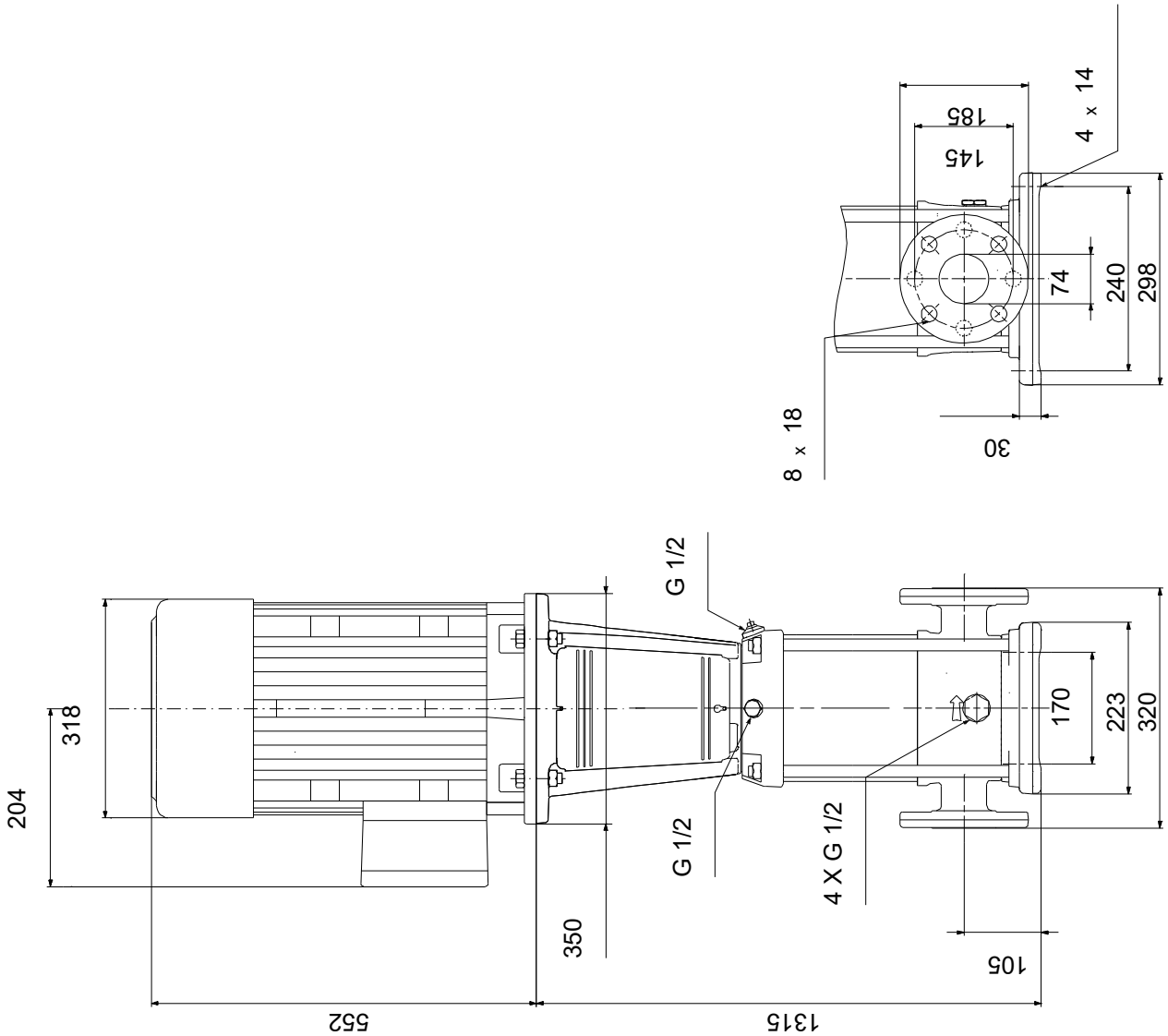


Note! All units are in [mm] unless others are stated.
Disclaimer: This simplified dimensional drawing does not show all details.

**Company name:**
**Created by:**
**Phone:**

**Date:** 9/9/2026

# 96122026 CR 32-11-2 A-F-A-E-HQQE 50 Hz

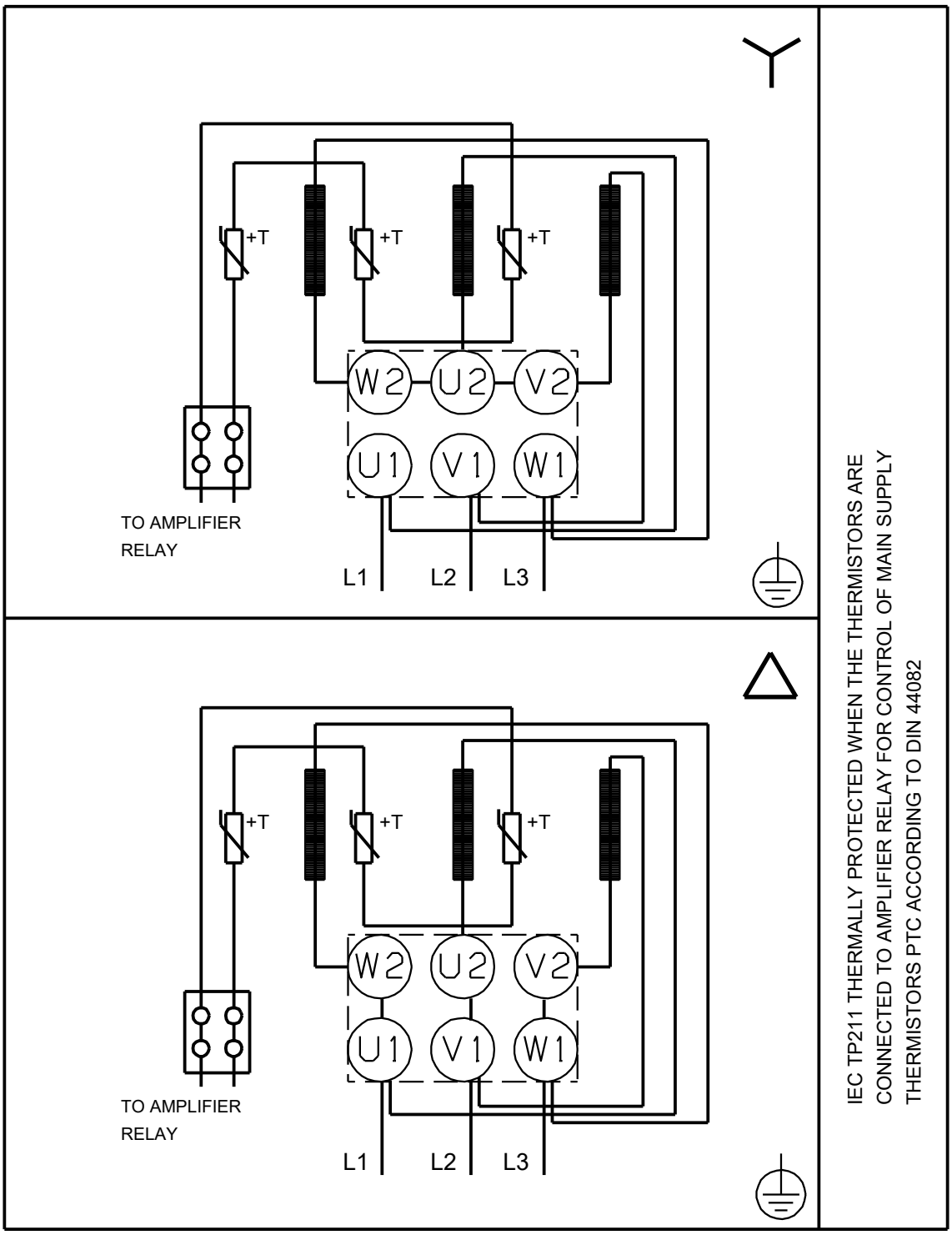


Note! All units are in [mm] unless others are stated.