Company name:
Created by:
Phone:

Date: 09/09/2026

Qty.	Description
1	**CR 3-23 A-FGJ-A-E-HQQE**

Note! Product picture may differ from actual product

Product No.: 96516665

Vertical, multistage centrifugal pump with inlet and outlet ports on same the level (inline). The pump head and base are in cast iron – all other wetted parts are in stainless steel. A cartridge shaft seal ensures high reliability, safe handling, and easy access and service. Power transmission is via a rigid split coupling. Pipe connection is via combined DIN-ANSI-JIS flanges.

The pump is fitted with a 3-phase, fan-cooled asynchronous motor.

Further product details

Steel, cast iron and aluminium components have an epoxy-based coating made in a cathodic electro-deposition (CED) process.

CED is a high-quality dip-painting process where an electrical field around the products ensures deposition of paint particles as a thin, well-controlled layer on the surface.

An integral part of the process is a pretreatment.
The entire process consists of these elements:

1) Alkaline-based cleaning.
2) Zinc phosphating.
3) Cathodic electro-deposition.
4) Curing to a dry film thickness 18-22 my m.

The colour code for the finished product is NCS 9000/RAL 9005.

Pump

A standard split coupling connects the pump and motor shaft. It is enclosed in the pump head/motor stool by means of two coupling guards.

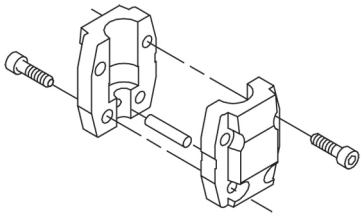

The pump head, pump head cover and flange for motor mounting is made in one piece. The pump head has a combined 1/2" priming plug and vent screw.

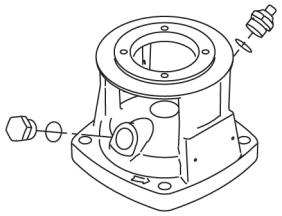

Company name:
Created by:
Phone:

Date: 09/09/2026

Qty.	Description
1	The pump is fitted with a balanced O-ring seal unit with a rigid torque-transmission system. This seal type is assembled in a cartridge unit which makes replacement safe and easy. Due to the balancing, this seal type is suitable for high-pressure applications. The cartridge construction also protects the pump shaft from possible wear from a dynamic O-ring between pump shaft and shaft seal. Seal faces: • Rotating seal ring material: silicon carbide (SiC) • Stationary seat material: silicon carbide (SiC) This material pairing is used where higher corrosion resistance is required. The high hardness of this material pairing offers good resistance against abrasive particles. Secondary seal material: EPDM (ethylene-propylene rubber) EPDM has excellent resistance to hot water. EPDM is not suitable for mineral oils. 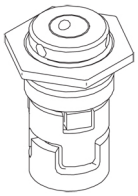 The shaft seal is screwed into the pump head. The chambers and impellers are made of stainless-steel sheet. The chambers are provided with a PTFE neck ring offering improved sealing and high efficiency. The impellers have smooth surfaces, and the shape of the blades ensure a high efficiency. The base is made of cast iron. The flanges and base are cast in one piece. The outlet side of the base has a combined drain plug and bypass valve. The pump is secured to the foundation by four bolts through the base plate. 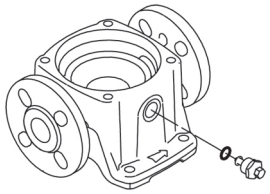 **Motor** The motor is a totally enclosed, fan-cooled motor with principal dimensions to IEC and DIN standards. The motor is flange-mounted with tapped-hole flange (FT). Motor-mounting designation in accordance with IEC 60034-7: IM B 14 (Code I) / IM 3601 (Code II). Electrical tolerances comply with IEC 60034. The motor efficiency is classified as IE3 in accordance with IEC 60034-30-1. The motor does not incorporate motor protection and must be connected to a motor-protective circuit breaker which can be manually reset. The motor-protective circuit breaker must be set according to the rated current of the motor (I1/1). The motor can be connected to a variable speed drive for adjustment of pump performance to any duty point. Grundfos CUE offers a range of variable speed drives. Please find more information in Grundfos Product Center. **Technical data** Liquid: Pumped liquid: Water Liquid temperature range: -20 .. 120 °C Selected liquid temperature: 20 °C Density: 998.2 kg/m³

Company name:
Created by:
Phone:

Date: 09/09/2026

Qty.	Description
1	Technical:
	Pump speed on which pump data are based: 2899 rpm
	Rated flow: 3 m³/h
	Rated head: 112.8 m
	Pump orientation: Vertical
	Shaft seal arrangement: Single
	Primary shaft seal: HQQE
	Code for shaft seal: HQQE
	Approvals: CE,EAC,UKCA,SEPRO,RCM,
	Approvals for drinking water: WRAS,ACS
	Curve tolerance: ISO9906:2012 3B
	Materials:
	Type key, code for rubber components. E = EPDM, V=FKM: E
	Base: Cast iron
	EN 1561 EN-GJL-200
	ASTM A48-25B
	Impeller: Stainless steel
	EN 1.4301
	AISI 304
	Type key, code for materials: A
	Bearing: SIC
	Installation:
	Maximum ambient temperature: 60 °C
	Maximum operating pressure: 25 bar
	Max pressure at stated temp: 25 bar / 120 °C
	25 bar / -20 °C
	Type of connection: DIN / ANSI / JIS
	Size of inlet connection: DN 25/32
	1 1/4 inch
	Size of outlet connection: DN 25/32
	1 1/4 inch
	Pressure rating for connection: PN 25
	Flange rating inlet: 250 lb
	Flange size for motor: FT115
	Terminal box position: 6
	Electrical data:
	Motor standard: IEC
	Motor type: 90LE
	Rated power - P2: 2.2 kW
	Power (P2) required by pump: 2.2 kW
	Mains frequency: 50 Hz
	Rated voltage: 3 x 220-240D/380-415Y V
	Rated current: 8.00/4.60 A
	Starting current: 840-920 %
	Cos phi - power factor: 0.86-0.80

Company name:
Created by:
Phone:

Date: 09/09/2026

Qty.	Description	
1	Rated speed:	2890-2910 rpm
	IE Efficiency class:	IE3
	Motor efficiency at full load:	85.9 %
	Motor efficiency at 3/4 load:	88.2-87.2 %
	Motor efficiency at 1/2 load:	88.0-85.5 %
	Number of poles:	2
	Enclosure class (IEC 34-5):	IP55 Dust/Jetting
	Insulation class (IEC 85):	F
	Built-in motor protection:	NONE
	Motor No:	85U01908
	Controls:	
	Terminal box position:	6
	Frequency converter:	None
	Others:	
	Minimum efficiency index, MEI ≥:	0.70
	Net weight:	46 kg
	Gross weight:	48.9 kg
	Shipping volume:	0.13 m³
	Swedish RSK No.:	5824838
	Finnish LVI No.:	4925394
	Norwegian NRF no.:	9040233

Company name:
Created by:
Phone:

Date: 09/09/2026

96516665 CR 3-23 A-FGJ-A-E-HQQE 50 Hz

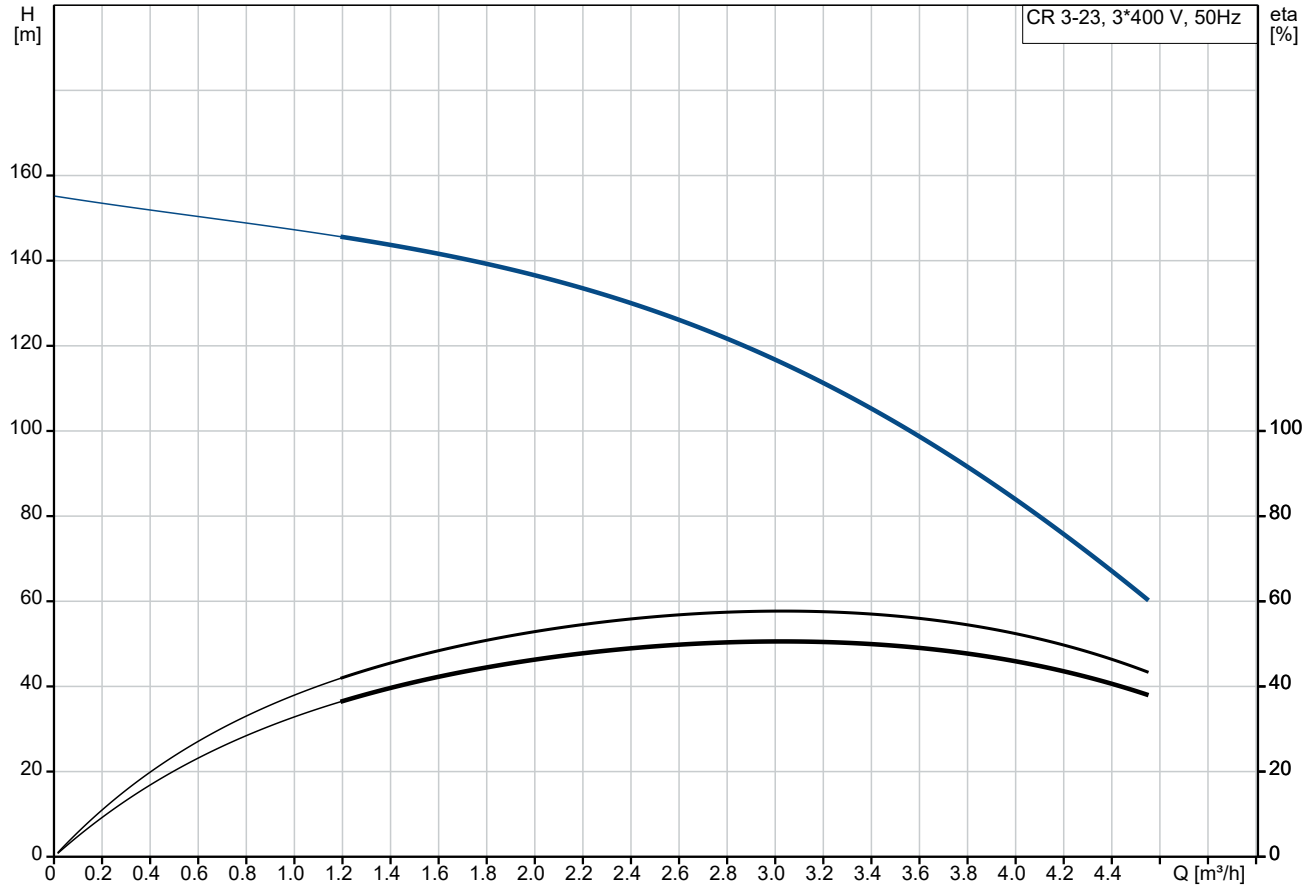

Pumped liquid = Water
Liquid temperature during operation = 20 °C
Density = 998.2 kg/m³

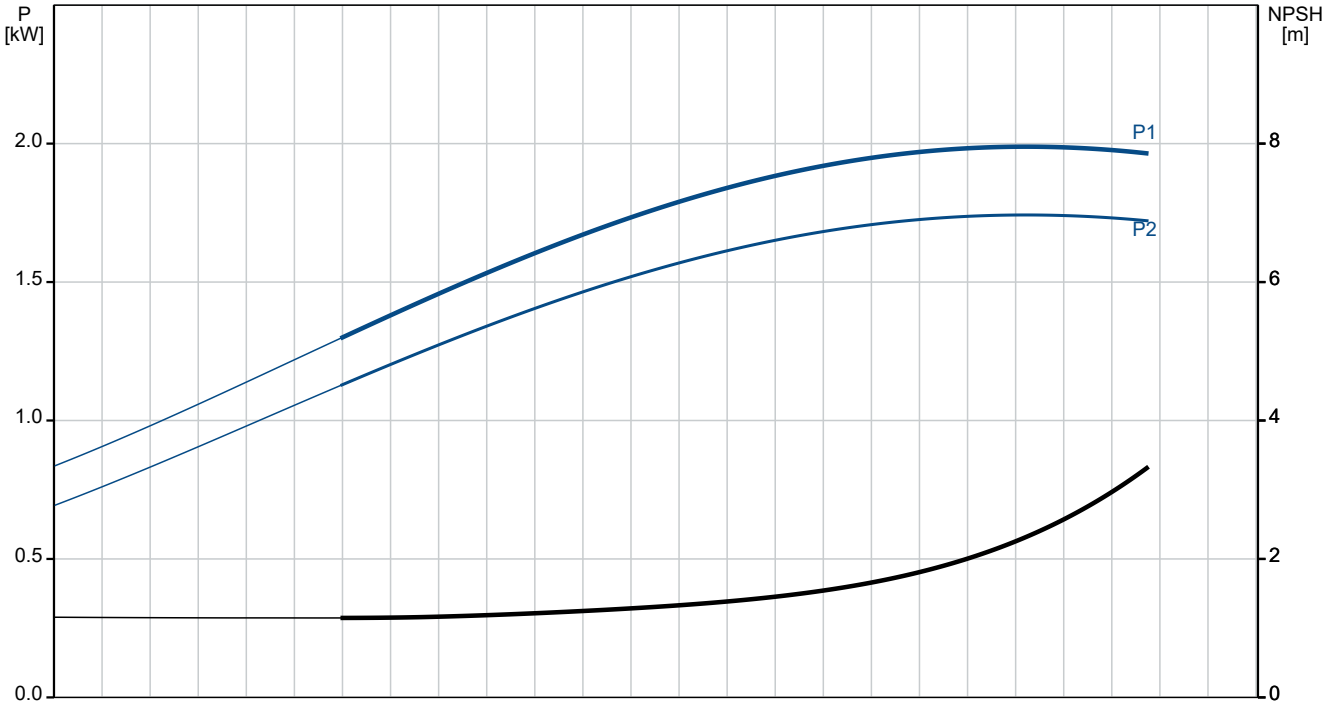

Company name:
Created by:
Phone:

Date: 09/09/2026

Description	Value
General information:	
Product name:	CR 3-23 A-FGJ-A-E-HQQE
Product No:	96516665
EAN number:	5700396747538
Price:	
Technical:	
Pump speed on which pump data are based:	2899 rpm
Rated flow:	3 m³/h
Rated head:	112.8 m
Maximum head:	153 m
Stages:	23
Impellers:	23
Number of reduced-diameter impellers:	0
Low NPSH:	N
Pump orientation:	Vertical
Shaft seal arrangement:	Single
Primary shaft seal:	HQQE
Code for shaft seal:	HQQE
Approvals:	CE,EAC,UKCA,SEPRO,RCM,
Approvals for drinking water:	WRAS,ACS
Curve tolerance:	ISO9906:2012 3B
Pump version:	A
Model:	A
Pump type:	CR
Materials:	
Type key, code for rubber components. E = EPDM, V=FKM:	E
Base:	Cast iron
	EN 1561 EN-GJL-200
	ASTM A48-25B
Impeller:	Stainless steel
	EN 1.4301
	AISI 304
Type key, code for materials:	A
Code for rubber:	E
Bearing:	SIC
Installation:	
Maximum ambient temperature:	60 °C
Maximum operating pressure:	25 bar
Max pressure at stated temp:	25 bar / 120 °C
	25 bar / -20 °C
Type key, code for pipework connection:	FGJ
Type of connection:	DIN / ANSI / JIS
Size of inlet connection:	DN 25/32
	1 1/4 inch
Size of outlet connection:	DN 25/32
	1 1/4 inch
Pressure rating for connection:	PN 25
Flange rating inlet:	250 lb
Flange size for motor:	FT115
Terminal box position:	6
Connect code:	FGJ
Liquid:	
Pumped liquid:	Water

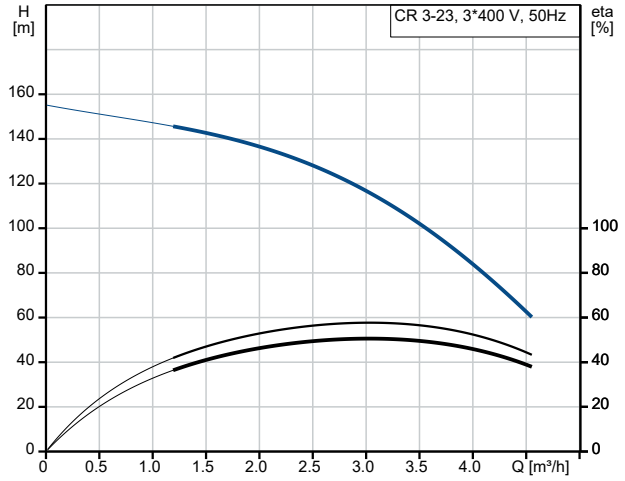

Pumped liquid = Water
Liquid temperature during operation = 20 °C
Density = 998.2 kg/m³

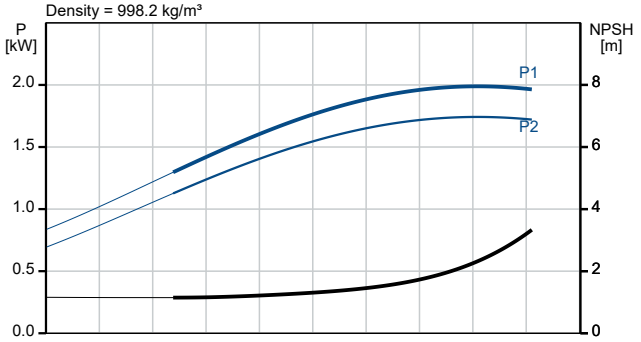

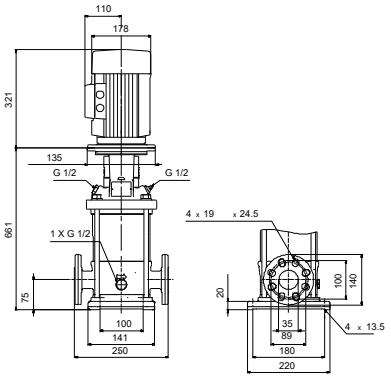

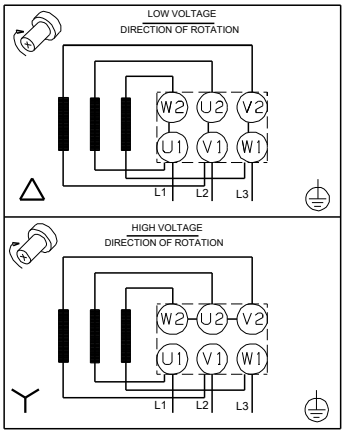

Company name:
Created by:
Phone:

Date: 09/09/2026

Description	Value
Liquid temperature range:	-20 .. 120 °C
Selected liquid temperature:	20 °C
Density:	998.2 kg/m³
Electrical data:	
Motor standard:	IEC
Motor type:	90LE
Rated power - P2:	2.2 kW
Power (P2) required by pump:	2.2 kW
Mains frequency:	50 Hz
Rated voltage:	3 x 220-240D/380-415Y V
Rated current:	8.00/4.60 A
Starting current:	840-920 %
Cos phi - power factor:	0.86-0.80
Rated speed:	2890-2910 rpm
IE Efficiency class:	IE3
Motor efficiency at full load:	85.9 %
Motor efficiency at 3/4 load:	88.2-87.2 %
Motor efficiency at 1/2 load:	88.0-85.5 %
Number of poles:	2
Enclosure class (IEC 34-5):	IP55 Dust/Jetting
Insulation class (IEC 85):	F
Built-in motor protection:	NONE
Motor No:	85U01908
Controls:	
Terminal box position:	6
Frequency converter:	None
Others:	
Minimum efficiency index, MEI ≥:	0.70
Net weight:	46 kg
Gross weight:	48.9 kg
Shipping volume:	0.13 m³
Swedish RSK No.:	5824838
Finnish LVI No.:	4925394
Norwegian NRF no.:	9040233

Company name:
Created by:
Phone:

Date: 09/09/2026

96516665 CR 3-23 A-FGJ-A-E-HQQE 50 Hz

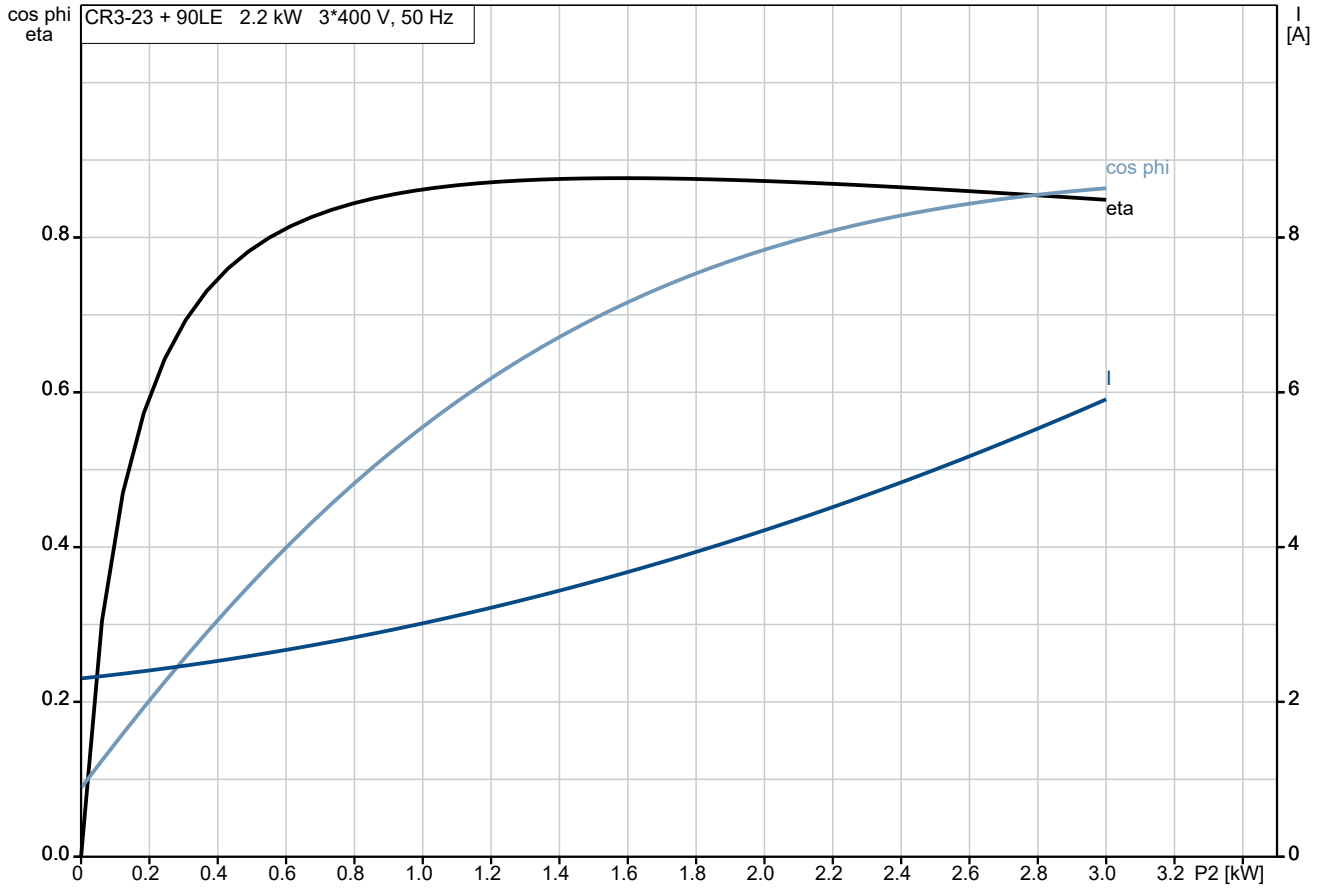

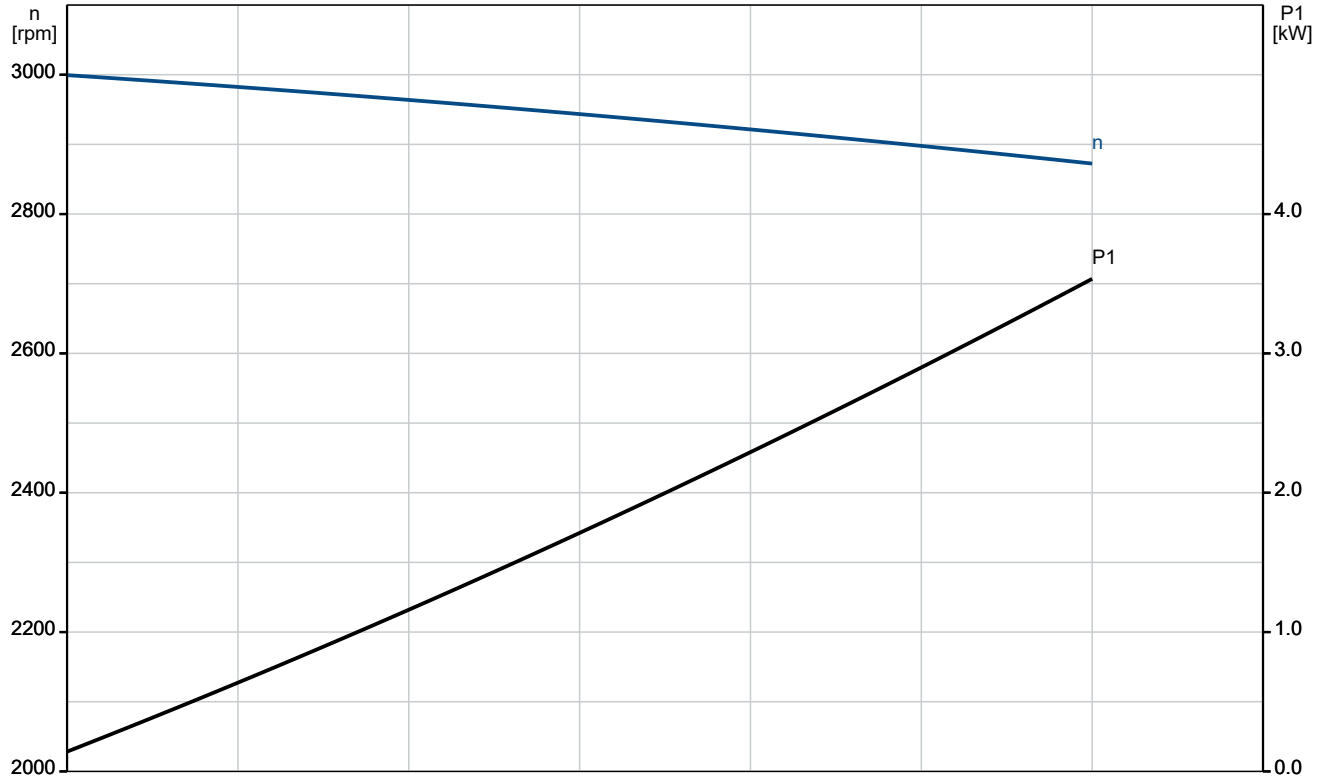

Company name:
Created by:
Phone:

Date: 09/09/2026

96516665 CR 3-23 A-FGJ-A-E-HQQE 50 Hz

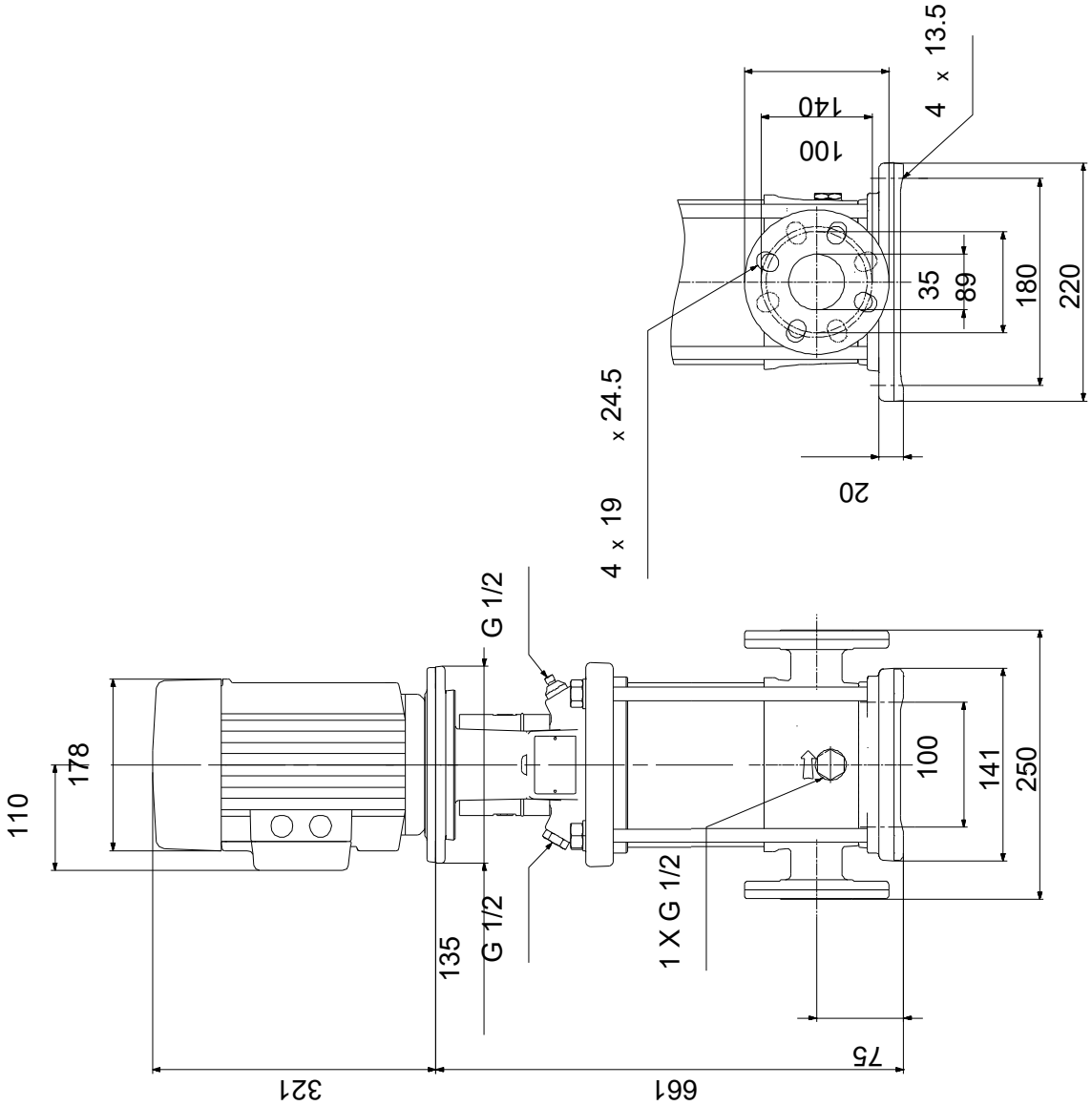

Note! All units are in [mm] unless others are stated.
Disclaimer: This simplified dimensional drawing does not show all details.

Company name:
Created by:
Phone:

Date: 09/09/2026

96516665 CR 3-23 A-FGJ-A-E-HQQE 50 Hz

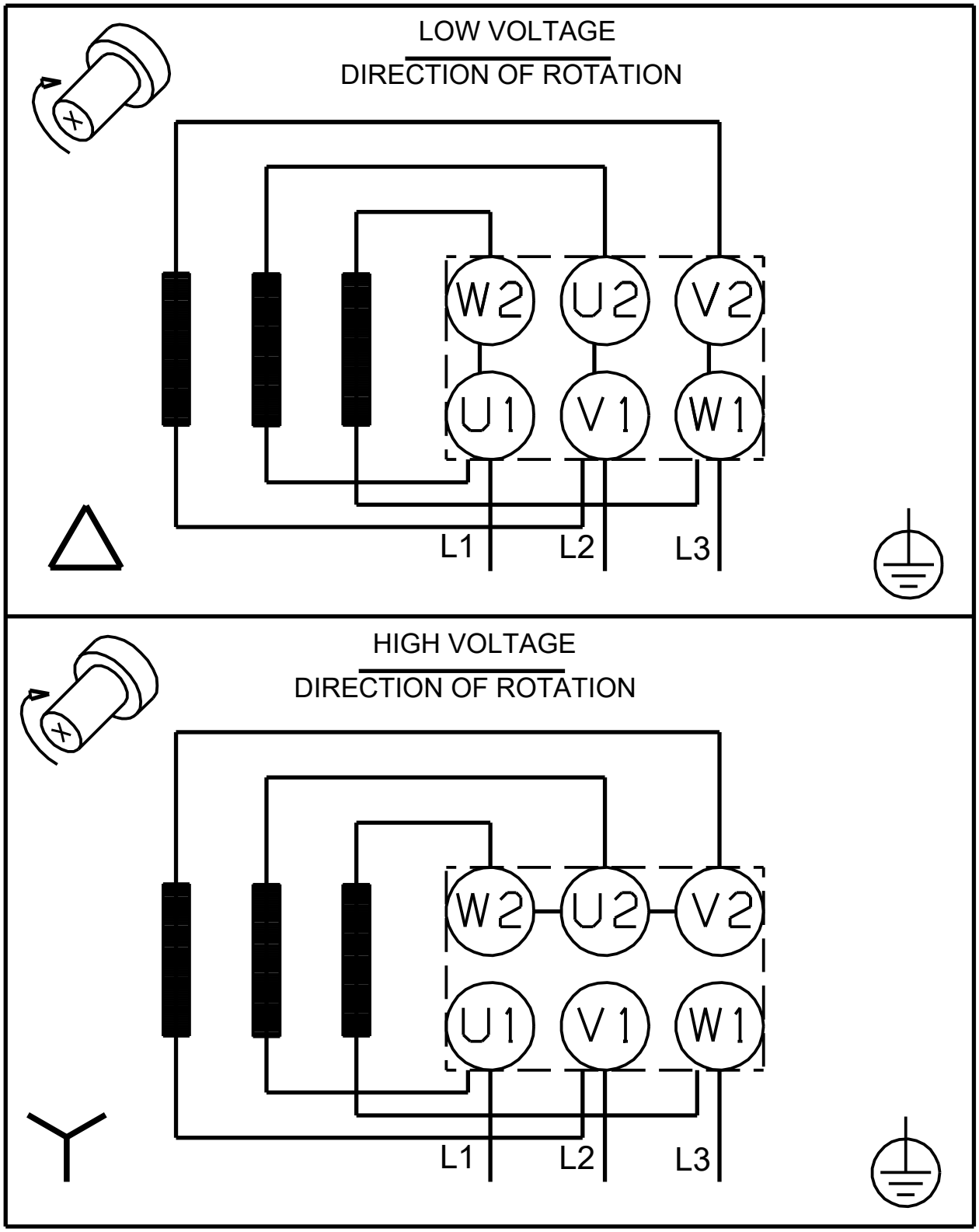

Note! All units are in [mm] unless others are stated.